RADFORD UNIVERSITY
RADFORD, VA

WHITING TURNER CONTRACTING

709 HOWE STREET
RADFORD, VA 24141

GENERAL NOTES

1. INTENTION : SHOP DRAWINGS ARE INTENDED TO COMPLY WITH ALL LAWS, CODES, ORDINANCES AND REGULATIONS OF THE LEGALLY CONSTITUTED BODY HAVING JURISDICTION OF PROJECT LOCALITY.
2. ALL CONSTRUCTION IMPLIED BY THE SHOP DRAWINGS SHALL CONFORM TO THE THE APPLICABLE CODES AS CURRENTLY REFERENCED AND/OR ENFORCED BY THE AGENCY HAVING JURISDICTION OF THIS PROJECT, UNLESS MORE STRINGENT REQUIREMENTS ARE INDICATED IN THE SHOP DRAWINGS. IT IS THE RESPOSIBILITY OF THE GENERAL CONTRACTOR AND/OR THE INSTALLER TO SECURE ALL APPROVALS AND PERMITS WITH THE GOVERNING AGENCY FORALL WORK AS NOTED HEREIN.
3. SCOPE : ALL TRADES SHALL FURNISH ALL LABOR, EQUIPMENT, MATERIALS AND PERFORM ALL WORK NECESSARY, INDICATED, REASONABLY INFERRED OR REQUIRED BY ANY AGENCY HAVING LEGAL JURISDICTION, TO COMPLETE THEIR SCOPE OF WORK, ON A TIMELY BASIS, FOR A COMPLETE AND PROPER FINISHED JOB.
4. THE CONTRACTOR SHALL VERIFY, IN THE FIELD, ALL CONDITIONS AND DIMENSIONS OF OTHERS WORK BEFORE STARTING APPLICATION OF FIBER REINFORCED PRODUCTS BY FCBP ASSOCIATES. THE ARCHITECT OF RECORD AND THE ENGINEER OF RECORD SHALL BE NOTIFIED IMMEDIATELY IF ANY DISREPENCIES ARE FOUND NOT CONFORMING TO APPROVED SHOP DRAWINGS AND/OR ARCHITECTURAL/ STRUCTURAL DRAWINGS OF RECORD.
5. UNIT MEMBER LOCATIONS ARE SHOWN ON ELEVATIONS REFERENCING THE PART NUMBER. THE PART NUMBERS REFLECT THE ARCHITECTURAL SHOP DRAWING NUMBER AS THE PART IS DETAILED. ELEVATIONS, SECTIONS AND DETAILS ARE REFERENCED ON THESE SHOP DRAWINGS AS RELATES TO THE CONTRACT DOCUMENTS. SHELL THICKNESS IS A NOMINAL 3/16" UNLESS NOTED OTHERWISE.
6. MACHINE BOLTS AND SCREWS AS SPECIFIED BY THESE SHOP DRAWINGS ARE TO CONFORM TO EITHER THE PROJECT SPECIFICATIONS OR ASTM A307, WHICHEVER IS MORE STRINGENT.
7. ANCHORAGE LOCATION AND DETAILS, ARE SHOWN FOR REFERENCE AND ARE TO BE REVIEWED BY THE PROJECT ARCHITECT AND THE PROJECT ENGINEER FOR CONFORMANCE TO ALL PERTINENT STRUCTURAL REQUIREMENTS AND REGULATIONS THAT GOVERN. ALL ANCHORAGE AND METHODS OF ATTACHMENT IS TO BE NON-CORROSIVE (FCBP RECOMMENDS STAINLESS STEEL OR APPROVED EQUAL.... SEE PROJECT SPECIFICATIONS). SCREW ATTACHMENTS ARE TO BE A MAXIMUM OF 10" ON CENTER UNLESS NOTED OTHERWISE. TYPES OF ANCHORS INDICATED ON THE DRAWINGS ARE FOR REFERENCE ONLY AND ARE THE RESPONSIBILTY OF THE INSTALLER. FCBP IS A MATERIAL MANUFACTURER/ SUPPLIER AND NOT RESPONSIBLE FOR INSTALLATION OR MEANS AND METHODS ASSOCIATED THERETO.
8. ALL INSTALLATION AND/OR WORK ASSOCIATED WITH THE INSTALLATION AS INDICATED, WITHIN THESE SHOP DRAWINGS, IS TO BE BY THE GENERAL CONTRACTOR, OR A SUB-CONTRACTOR AS SELECTED BY, AND CONTRACTED WITH, THE GENERAL CONTRACTOR (REFERENCE THE PROJECT SPECIFICATIONS FOR INSTALLER REQUIREMENTS).
9. INSTALLATION SHALL BE PERFORMED IN ACCORDANCE WITH MANUFACTURER'S RECOMMENDATIONS AND AS INDICATED BY STANDARDS ESTABLISHED BY THE COMPOSITE FABRICATOR'S ASSOCIATION (CFA). IT IS THE RESPONSIBILTY OF THE INSTALLER TO MEET LOCAL BUILDING CODES.
10. ALL BOLT-TYPE FASTENERS SHALL HAVE NUTS AND WASHERS OF APPROPRIATE SIZE AND CONFIGURATION FOR THE INTENDED INSTALLATION. ALL FASTENERS SHALL BE INSTALLED WITH A MINIMUM EDGE DISTANCE OF 1.5 TIMES THE DIAMETER OF SUBJECT FASTENER. ALL FASTENERS SHALL BE PLACED A MAX. OF 2" FROM THE CORNER OF ANY PART AS SUPPLIED BY DEC ASSOCIATES.
11. CONCEALED INTERNAL FRAMING COMPONENTS AND DETAILS AS SHOWN HEREIN ARE FOR REFERENCE ONLY. ALL FRAMING COMPONENTS (PRIMARY SUB-STRUCTURE AND SECONDARY FRAMING) ARE TO BE PER THE CONTRACT DOCUMENTS.
12. ALL FRAMING TO BE BY OTHERS UNLESS NOTED OTHERWISE, OR AS CONTRACTUALLY ARRANGED BETWEEN THE INSTALLER AND THE GENERAL CONTRACTOR.
13. ALL FIBER REINFORCED MATERIAL IS SUPPLIED UNFINISHED UNLESS NOTED OTHERWISE HEREIN. ALL ECHO STONE PARTS ARE MANUFACTURED WITH A WHITE GEL-COAT FINISH THAT IS READY TO BE PRIMED AND PAINTED IN THE FIELD BY OPTHERS. ANY SPECIFIC FINISHES (FACTORY PAINT, AGGREGATES, TEXTURES) ARE NOTED BELOW.
    - SEE INDIVIDUAL PART DRAWINGS FOR FINISH TYPE LOCATIONS.

    A. SIMULATED STONE
    B. –
    C. –
14. THE RELATIONSHIP OF THE FRP/FRG FABRICATED PARTS TO THE SUPPORTING CONSTRUCTION AS INSTALLED BY OTHER TRADES IS SHOWN ON PARTS SECTIONS AND DETAIL DRAWINGS FOR REFERENCE ONLY.
15. ALL RELEVANT RELATIONSHIPS TO STRUCTURAL, MECHANICAL, ELECTRICAL AND PLUMBING ARE SHOWN IN THE CONTRACT DOCUMENTS FOR REFERENCE ONLY. INSTALLER TO FIELD VERIFY ALL CONDITIONS REFERENCED HEREIN AND NOTIFY CONTRACTOR IN WRITING OF ANY AND ALL ISSUES THAT CONTRADICT THE CONTRACT DOCUMENTS.
16. JOINT CONDITIONS ON CONTINUOUS RUNNING PARTS, OR MULTIPLE LAYER PARTS, ARE SHOWN ON SHOP DRAWINGS. THE LOCATIONS OF THE JOINTS ARE SHOWN ON THE ELEVATIONS, SECTIONS OR LAYOUT PLAN FOR THE CONTINUOUS RUNNING PARTS. MULTIPLE LAYER PARTS ARE SHOWN ON THE PARTS SECTION OR DETAIL DRAWING. THE FINISHING DETAILS AND SEALANT INFORMATION SHOULD BE AS REFERENCED IN THE PROJECT SPECIFICATIONS AND CONTRACT DOCUMENTS.
17. THE CORRESPONDING PART NUMBERS AS THEY ARE SHOWN ON THESE SHOP DRAWINGS WILL BE INDICATED ON THE ACTUAL PARTS SUPPLIED TO THE FIELD. THE INSTALLER IS TO REFERENCE ALL PART NUMBERS ON THE SHOP DRAWINGS IN ORDER TO LOCATE, POSITION AND INSTALL EACH INDIVIDUAL PART. IT IS THE INTENT OF FCBP TO INCLUDE ANY AND ALL PERTINENT INFORMATION ON THESE DRAWINGS AS NECESSARY TO COMPLETE FABRICATION OF THE INDICATED PARTS. ANY AND ALL ERRORS AND/OR OMISSIONS NOTED THAT ARE DEEMED IMPORTANT AND NECESSARY, ARE TO BE INDICATED IN WRITING DURING THE SHOP DRAWING SUBMITTAL PROCESS.
18. LIFTING AND ERECTION DETAILS FOR SPECIAL CONDITIONS ARE SHOWN ON THE SHOP DRAWINGS FOR APPLICABLE PARTS. ALL OTHER CONDITIONS CAN BE LIFTED WITH THE USE OF NYLON STRAPS OR BY HAND IN ACCORDANCE WITH MANUFACTURERS PRACTICES AS REFERENCED IN "GUIDELINES AND RECOMMENDED PRACTICES FOR FIBERGLASS REINFORCED PLASTIC ARCHITECTURAL PRODUCTS" AS ISSUED BY THE COMPOSITE FABRICATORS ASSOCIATION (NYLON STRAPS MUST BE RATED FOR APPLICABLE LOADS).
19. A. FRP WILL BE FABRICATED IN COMPLIANCE WITH STANDARDS SET BY THE CFA IN "GUIDELINES AND RECOMMENDED PRACTICES FOR FIBERGLASS REINFORCED PLASTIC ARCHITECTURAL PRODUCTS".
    B. FRG WILL BE FABRICATED IN COMPLIANCE WITH STANDARDS SET BY THE CFA IN "GUIDELINES AND RECOMMENDED PRACTICES FOR FIBERGLASS REINFORCED GYPSUM ARCHITECTURAL PRODUCTS".
20. ANY PROPOSED CHANGES IN THE SCOPE OF WORK, OR VARIATION TO CONDITIONS AS INDICATED ON THESE SHOP DRAWINGS, PURSUANT TO APPROVAL OF SAID SHOP DRAWINGS, ARE TO BE PROCESSED IN WRITING AS CHANGE ORDERS, CONSTRUCTION CHANGE DIRECTIVES, R.F.I.'s, ETC.. DEC WILL ONLY PROCEED WITH ANY REVISIONS PURSUANT TO RECEPTION OF WRITTEN DOCUMENTATION AS ISSUED BY THE CONTRACTOR.
21. THE INSTALLER/CONTRACTOR SHALL PERFORM NO PORTION OF THE WORK REQUIRING SUBMITTAL AND REVIEW OF SHOP DRAWINGS, PRODUCT DATA, SAMPLES OR SIMILAR SUBMITTALS, UNTIL THE RESPECTIVE SUBMITTAL(S) HAVE BEEN APPROVED BY THE ARCHITECT AND GENERAL CONTRACTOR. SUCH WORK WILL BE IN ACCORDANCE WITH APPROVED SUBMITTALS.
22. APPROVAL OF THESE SHOP DRAWINGS, PRODUCT DATA, SAMPLES AND SIMILAR SUBMITTALS, REPRESENTS THAT THE CONTRACTOR HAS DETERMINED AND VERIFIED MATERIALS, FIELD MEASUREMENTS, AND FIELD CONSTRUCTION CRITERIA RELATED THERETO AND HAS CHECKED AND COORDINATED WITHIN SUCH SUBMITTALS WITH THE REQUIREMENTS OF THE CONTRACT DOCUMENTS.
23. FRP PRODUCTS AS SUPPLIED BY FCBP ARE NOT INTENDED OR WARRANTED AS A WATER PROOFING MEMBRANE. ALTHOUGH WEATHER RESISTANT, MATERIAL SUPPLIED BY FCBP IS INTENDED TO BE USED AS A DECORATIVE ARCHITECURAL FEATURE ONLY.
24. NO CHANGES ARE TO BE MADE TO THESE DRAWINGS WITHOUT THE KNOWLEDGE AND WRITTEN CONSENT OF DEC.
25. ANY AND ALL DAMAGES OR DISCREPENCIES OF MATERIAL SHIPPED TO THE SITE MUST BE REPORTED IN WRITING TO FCBP WITHIN 48 HOURS OF DELIVERY.
26. FCBP IS NOT AN ENGINEERING COMPANY AND DOES NOT OFFER SAID PROFFESSIONAL SERVICES. ANY STRUCTURAL REVIEW CERTIFICATION REQUIREMENTS MUST BE DONE THROUGH A LICENSED STRUCTURAL ENGINEER.
27. THE CONTRACTOR AND / OR THE INSTALLER IS RESPONSIBLE FOR THE PROPER STORAGE AND PROTECTION OF THE MATERIAL ON-SITE. IMPROPER STORAGE AND PROTECTION MAY RESULT IN WARPING, BOWING, PHYSICAL DMAGE AND/OR CONDITIONS THAT WILL MAKE THE PRODUCT UNSUITABLE FOR USE.
28. CLEANUP: CLEAN SOILED FRP SURFACES WITH DETERGENT AND WATER, USING SOFT FIBER BRUSHES AND SPONGES, AND THOROUGHLY RINSED WITH CLEAN WATER.

TYPICAL INSTALLATION INSTRUCTIONS

(FIELD CONDITIONS AND JOINT DIMENSIONS MAY VARY – INSTALLER IS TO DETERMINE AND BE RESPONSIBLE FOR APPLYING THESE GUIDELINES TO THESE VARYING CONDITIONS)

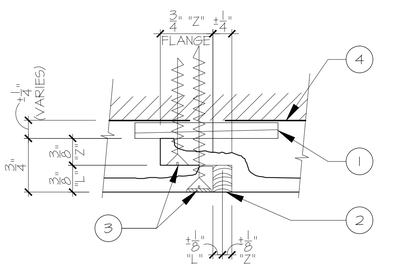

1. SHIM BLOCKING AT "Z / L" JOINTS WITH TYPICAL SCREW ATTACHMENTS – DEPTH MAY VARY – AS NEEDED – TYPICAL (BY OTHERS)
2. APPLY CONTINUOUS PAINTABLE CAULK (PER PROJ SPECS) AT ALL "Z" JOINTS AS SHOWN, BEFORE INSTALLING THE NEXT PART ("L" SIDE OF ADJACENT PART), MAKING SURE TO GET FULL COVERAGE OF SEALANT TO ASSIST WITH OVERALL WEATHER TIGHT CONDITIONS. FIELD STANDARD WEATHERTIGHT CONSTRUCTION SHOULD STILL BE OBSERVED, THIS TYPE OF ATTACHMENT IS NOT TO BE CONSIDERED AS "WEATHER-PROOFING". FIELD STANDARD AND APPROVED CONSTRUCTION METHODS ARE STILL TO BE OBSERVED.
3. PRE-DRILL, C'SINK, No. 12 CORROSIVE RESISTANT SCREWS AT LOCATIONS INDICATED, FINISH FLUSH AND SMOOTH – WHERE OCCURS – TYPICAL (ALL SCREWS ARE PLACED AT 10" o.c. – MAXIMUM – TYPICAL) (BY OTHERS)
4. DASHED LINE INDICATES FACE OF SOLID – RIGID – STRUCTURALLY SOUND SURFACE (BY OTHERS)

NOTE :

1. ALL ATTACHMENT SCREWS ARE TO BE PRE-DRILLED AND CONTERSUNK . THIS WILL ENSURE THAT THE ATTACHMENT SCREW HEAD WILL IN NO WAY INTERFERE WITH SECURING ADJACENT PARTS FLUSH WITH EACH OTHER .
2. SHIMS ARE USED TO MAINTAIN A "TRUE" AND / OR "FLUSH" SURFACE . SHIM SIZE , SPACING , AND FREQUENCY OF OCCURANCE WILL VARY ACCORDING TO FIELD CONDITIONS.
3. DIMENSIONS SHOWN ARE FOR REFERENCE ONLY . REFER TO INDIVIDUAL PART DRAWINGS FOR SPECIFIC DIMENSIONAL SPECIFICATIONS – TYPICAL .

PHYSICAL PROPERTIES

G F R G

NOT USED

DESCRIPTION: "GLASS FIBER REINFORCED GYPSUM"

1. PRE MOLDED GRG PARTS ARE FABRICATED TO DETAILS AND DIMENSIONS SHOWN.
2. FINISH PRODUCT SHALL CONFORM TO THE FOLLOWING STANDARDS:

PHYSICAL PROPERTIES OF GRG "FIBROCAL"

WEIGHT	2.0 lbs. psf
FLEXURAL STRENGTH	4,192 psi
TENSILE STRENGTH	1,340 psi
COMPRESSIVE STRENGTH	5,800 psi
DENSITY	110 lbs. pcf
HARDNESS (BARCOL)	105
FLAMMABILITY :	
FLAME SPREAD	0
SMOKE DEVELOPED	0
ASTM E8	CLASS 1
GLASS CONTENT	38.7%

3. ALL PARTS TO CONTAIN SUPPORTS AS REQUIRED KEEPING WITHIN ALLOWABLE TOLERANCES.
4. FINISH SURFACES SHALL BE TRUE OR TEXTURED ACCORDING TO DESIGN REQUIREMENTS.
5. ALLOWABLE TOLERANCES:

DIMENSIONAL TOLERANCES:	± 1/8"
WALL THICKNESS THICKNESS:	NOMINAL 3/16"
OUT OF PLUMB:	± 1/8"
BOWING:	L-360 MAXIMUM

6. JOINT TREATMENT MATERIALS: AS INDICATED ON APPROVED SHOP DRAWINGS AND IN ACCORDANCE WITH MANUFACTURERS PRINTED RECOMMENDATIONS. GENERAL; ASTM C-475, TYPE RECOMMENDED BY THE MANUFACTURER FOR THE APPLICATION INDICATED, EXCEPT AS OTHERWISE INDICATED.
7. JOINT TAPE: PERFORATED TYPE.
8. JOINT COMPOUND: READY MIXED VINYL TYPE FOR INDOOR USE, 2 SEPARATE GRADES; ONE SPECIFICALLY FOR BEDDING TAPES AND FILLING DEPRESSIONS, AND ONE FOR TOPPING AND SANDING.

G F R P

NOT USED

DESCRIPTION: "FIBERGLASS REINFORCED ACRYLIC RESIN"

1. PRE MOLDED FRP PARTS ARE FABRICATED TO DETAILS AND DIMENSIONS SHOWN.
2. FINISH PRODUCT SHALL CONFORM TO THE FOLLOWING STANDARDS:

PHYSICAL PROPERTIES OF FIBERGLASS

SHEAR STRENGTH, psi *2	7,200
FLEXURAL STRENGTH, psi	20,000
FLEXURAL MODULES x 10 psi	1.38
TENSILE STRENGTH, psi	8,300
TENSILE STRENGTH x 10 psb	2.1
GLASS CONTENT	14.9
ATH CONTENT	43.5
RESIN CONTENT	41.6
COMPRESSIVE STRENGTH, psi	29,832
ASTM E-84 :	
FLAME	25
SMOKE	80
THICKNESS, inches	0.190
DENSITY, lbs./ft.	110

*2 INNER LAMINATED SHEAR

3. ALL MATERIAL SHALL BE CLASS I RATED WITH A FLAME SPREAD OF 25 OR LESS WHEN TESTED IN ACCORDANCE WITH ASTM/E-84. THE USE OF ANTIMONY OXIDE IS NOT PERMITTED.
4. ALL PARTS TO CONTAIN SUPPORTS AS REQUIRED TO KEEP WITHIN ALLOWABLE TOLERANCES.
5. FINISH SURFACES SHALL BE TRUE AND TEXTURED ACCORDING TO DESIGN REQUIREMENTS WITH EITHER A SMOOTH GEL-COAT FINISH OR A "READY FOR PRIMER AND PAINT" GEL-COAT.
6. RESINS: BASE RESIN IS TO BE A MODIFIED ACRYLIC THERMOSET POLYMER. FORMULATIONS WILL INCLUDE HYDRATED FILLERS TO MEET THE CLASS 1 FIRE RATING.
7. GEL-COAT: GEL-COAT SHOULD BE A HIGH QUALITY, NEOPENTYL GLYCOL (NPG) ISOPHTHALIC GEL-COAT, WITH ULTRA VIOLET STABILIZERS. GEL-COAT THICKNESS SHOULD BE 18 TO 25 MILS.
8. REINFORCEMENT: THE MANUFACTURER MAY USE CHOPPER SPRAY, HAND LAMINATED MAT AND/OR CORE-MAT AS REINFORCEMENT. THE REINFORCEMENT USED SHOULD CORRELATE TO THE END USE PERFORMANCE REQUIREMENTS OF THE FINISH PRODUCT. AT ALL TIMES, MINIMUM PHYSICAL PROPERTIES MUST BE MET. LARGE FLAT SURFACES AND/OR EXTENDED SPANS MUST CONTAIN ADDITIONAL REINFORCEMENT LAMINATE. JOB-SITE CONDITIONS, SPECIFIC MATERIAL PERFORMANCE REQUIREMENTS AND SPECIAL CONDITIONS, MAY DICTATE THE ADDITIONAL REINFORCEMENT.
9. ALLOWABLE TOLERANCES:

DIMENSIONAL TOLERANCES:	± 1/8"
WALL THICKNESS THICKNESS:	NOMINAL 3/16"
OUT OF PLUMB:	± 1/8"
BOWING:	L-360 MAXIMUM

KEYNOTES

NOTE : ALL BLOCKING MEMBERS SUPPLIED BY OTHERS SHOULD BE FIRE RETARDANT TREATED AND FIRE TREATED WHEN APPLICABLE. (TYPICAL THROUGHOUT PROJECT)

1. SHIM BLOCKING AT JOINTS WITH TYPICAL SCREW ATTACHMENTS – DEPTH MAY VARY – AS NEEDED – TYP (BY OTHERS).
2. APPLY CONTINUOUS PAINTABLE CAULK (PER PROJECT SPECS) AT ALL JOINTS AS SHOWN, BEFORE INSTALLING THE NEXT PART ("L" SIDE OF ADJACENT PART), MAKING SURE TO GET FULL COVERAGE OF SEALANT TO ASSIST WITH OVERALL WEATHERTIGHT CONDITIONS. FIELD STANDARD WEATHERTIGHT CONSTRUCTION SHOULD STILL BE OBSERVED, THIS TYPE OF ATTACHMENT IS NOT TO BE CONSIDERED AS "WEATHERPROOFING". FIELD STANDARD AND APPROVED CONSTRUCTION METHODS ARE STILL TO BE OBSERVED.
3. PRE-DRILL, C'SINK, No. 12 CORROSIVE RESISTANT SCREWS AT LOCATIONS INDICATED, FINISH FLUSH AND SMOOTH – WHERE OCCURS – TYPICAL (ALL SCREWS ARE PLACED AT 10" o.c. – MAXIMUM – TYPICAL) (BY OTHERS).
4. DASHED LINE INDICATES FACE OF SOLID – RIGID – STRUCTURALLY SOUND INTERNAL FRAMING SYSTEM – TYP ALL NECESSARY CALCULATIONS AND INFORMATION NEEDED TO PASS ALL APPLICABLE CODES AND DEPARTMENTS OF RECORDS ARE TO BE BY OTHERS UNLESS PROVISIONS ARE SPECIFICALLY MADE CONTRACTUALLY WITH DEC ASSOCIATES TO PROVIDE THIS ADDITIONAL SERVICE.
5. TYPICAL SCREWS AT 10" o.c.
6. TYPICAL SCREWS AT JOINTS ONLY.
7. TYPICAL SCREWS AND BLOCKING TO PULL " Z " SIDE OF PART TO " L " SIDE OF PART.
8. FINISH FLUSH AND SMOOTH – TYPICAL (BY OTHERS)
9. CONT SEALANT AND/OR BACKER ROD – TYPICAL (BY OTHERS).
10. FC – FIELD CUT TO FIT AS NEEDED (BY OTHERS)

RFI XXX-01 — REQUEST FOR INFORMATION: THIS SYMBOL MAY BE PUT ON A DRAWING TO BRING ATTENTION TO AN RFI THAT HAS BEEN ANSWERED. IF SO THE CORRESPONDING RFI No. WILL APPEAR INSIDE SYMBOL.
RFI No. PREVIOUSLY SENT TO CLIENT

RFI XX-01 — DURING THE SUBMITTAL PROCESS TO EXPEDITE APPROVAL THIS SYMBOL MAY BE PLACED WITHOUT ANY REFERENCE NUMBER TO BRING ATTENTION TO A QUESTION THAT DEC ASSOCIATES NEEDS AN ANSWER TO, OR, A POSSIBLE FIELD CONDITION THAT NEEDS LOOKING AT. IF THESE TWO LATTER ITEMS OCCUR A SMALL FOOTNOTE WILL BE REFERENCED ON THAT SPECIFIC SHEET ALONG WITH THIS SYMBOL.
FOOTNOTE No.
CORRESPONDING SHEET No.

E C H O – S T O N E™

DESCRIPTION: GLASS FIBER REINFORCED MINERAL COMPOSITE

1. PRE MOLDED GFRC PARTS ARE FABRICATED TO DETAILS AND DIMENSIONS SHOWN WITH A NOMINAL THICKNESS OF 3/8".
2. FINISH PRODUCT SHALL CONFORM TO THE FOLLOWING STANDARDS:

PHYSICAL PROPERTIES OF GFRC™

BORCOL HARDNESS	ASTM-D-2583, 43 POINTS
FLEXURAL STRENGTH	ASTM-D-790, 3050 PSI
IMPACT STRENGTH	ATSM-D-256, 190 FT. LBS./IN.
TENSILE STRENGTH	ASTM-D-638, 3500 PSI
COMPRESSION	ASTM-D-39, 4000 PSI
DENSITY	ASTM-D-792, 105 LBS./CU.FT
CTE AVERAGE	ASTM-D-696, 11.0 X 10-6 IN./IN./F
FLAMABILITY-CLASS I MATERIALS	ASTM-E-84, 5 OR LESSFLAME/20 OR LESS SMOKE
UNIT EWIGHT (LBS./SQ.FT. AT 1/2")	3-5 LBS.

3. ALL PARTS TO CONTAIN SUPPORTS AS REQUIRED TO KEEP WITHIN ALLOWABLE TOLERANCES.
4. FINISH SURFACES SHALL BE TRUE AND TEXTURED ACCORDING TO DESIGN REQUIREMENTS .
5. REINFORCEMENT: THE MANUFACTURER MAY USE CHOPPER SPRAY, HAND LAMINATED MAT AS REINFORCEMENT. THE REINFORCEMENT USED SHOULD CORRELATE TO THE END USE PERFORMANCE REQUIREMENTS OF THE FINISHED PRODUCT. AT ALL TIMES, MINIMUM PHYSICAL PROPERTIES MUST BE MET. LARGE FLAT SURFACES AND/OR EXTENDED SPANS MUST CONTAIN ADDITIONAL REINFORCEMENT LAMINATE. JOB-SITE CONDITIONS, SPECIFIC MATERIAL PERFORMANCE REQUIREMENTS AND SPECIAL CONDITIONS, MAY DICTATE THE ADDITIONAL REINFORCEMENT.
6. ALLOWABLE TOLERANCES:

DIMENSIONAL IN ALL DIRECTIONS:	± 3/16" IN.
WALL THICKNESS TOLERANCE:	± 1/8" IN.
VARIATION FROM SQUARE	± 1/8" IN.
BOWING:	+/- 1/4 IN 8 FT.

SHEET INDEX

C1	COVER SHEET	
△F1	PART LOCATION PLAN	
△F2	PART LOCATION PLAN	
△F3	PART LOCATION PLAN	
F4	PART LOCATION PLAN	
F5	PART LOCATION PLAN	
F6	PART LOCATION PLAN	
F7	PART LOCATION ELEVATIONS	
F8	PART LOCATION ELEVATIONS	
△F9	PART LOCATION PLAN	
△F10	PART LOCATION ELEVATIONS	
△P1	ECHO STONE CORNICE	(A)
△P1 CONT.	ECHO STONE CORNICE	(A)
P1A	ECHO STONE SOFFIT PANEL	(A-2)
△P2	ECHO STONE CORNICE	(B)
△P2 CONT.	ECHO STONE CORNICE	(B)
△P3	ECHO STONE CORNICE	(C)
△P3 CONT.	ECHO STONE CORNICE	(C)
△P4	ECHO STONE CORNICE	(D)
△P5	ECHO STONE CORNICE	(E)
△P6	ECHO STONE CORNICE	(F, F2)
△P6 CONT.	ECHO STONE CORNICE	(F, F2)
P7	ECHO STONE FLAT PANEL	(F-1)
P8	ECHO STONE SOFFIT PANEL	(F-3)
P9	ECHO STONE SOFFIT TRIM	(F-4)
△P10	ECHO STONE CORNICE	(G)
P11	ECHO STONE CORNICE	(K)
△P12	ECHO STONE PANEL	(L, M, M-1)
△P13	ECHO STONE PANEL	(L-1)
P14	ECHO STONE PANEL	(M-2)
P15	ECHO STONE TRIM	(N)
P16	ECHO STONE TRIM	(O)

SUBMITTAL HISTORY

△1 CLIENT UPDATE – 03 – 30 – 2011

FIRST SUBMITTAL – 01 – 26 – 2011

FIRST CLASS ARCHITECTURAL PRODUCTS
1-888-514-8141

FIRST CLASS
Building Products, Inc.
3600 DALLAS HIGHWAY
SUITE 230-387
MARIETTA GA 30064
WWW.FIRSTCLASSBP.COM

THESE PLANS AND THE DESIGNS CONTAINED THEREIN ARE THE SOLE PROPERTY First Class Building Products (HEREINAFTER DESIGNATED FCBP). THESE PLANS MAY NOT BE REPRODUCED OR USED WITHOUT WRITTEN PERMISSION OF DEC. UNAUTHORIZED USE SHALL INVITE A CLAIM FOR COMPENSATION BY FCBP. ALL FABRICATORS, CONTRACTORS INDICATED AND OTHERS UTILIZING THESE PLANS IN CONNECTION WITH THIS PROJECT ARE RESPONSIBLE FOR THEIR OWN MEASUREMENTS AND DIMENSIONS ON THE JOB. FCBP ASSUMES NO RESPONSIBILITY FOR WORK DONE BY CONTRACTORS, NOR FOR ANY CHANGES MADE NECESSARY BY LOCAL BUILDING CODES, ORDINANCES CONDITIONS, PLUMBING AND ELECTRICAL INFORMATION AND OUTLETS ARE FOR THE SOLE PURPOSE OF INDICATING THE REQUIREMENTS OF THE FIXTURES AND EQUIPMENT.. STRUCTURAL OR BY THE SUBSTITUTION OR CHANGES IN EQUIPMENT SHOWN ON THESE PLANS. REFERENCE IS MADE TO THE GENERAL NOTES WHICH ARE PART OF THESE PLANS, AND CAN ONLY BE MODIFIED BY WRITTEN AGREEMENT. ALL DIMENSIONS SHOWN ON THESE PLANS ARE TO BE VERIFIED WITH SAID GENERAL NOTES BEFORE COMMENCING ANY WORK DONE ON THIS PROJECT. ANY INCONSISTANCIES BETWEEN THESE PLANS, THE GENERAL NOTES, AND THE LOCAL BUILDING CODES, OR ORDINANCES, MUST IMMEDIATELY BE CALLED TO THE ATTENTIN OF FCBP IN WRITING SO THAT ANY INCONSISTANCIES CAN BE RESOLVED. FCBP IS NOT RESPONSIBLE FOR ANY ARCHITECTURAL OR ENGINEERING DETAILS OR SPECIFICATIONS, THE USE BY ANY PERSON OR FIRM OF THESE PLANS OR ANY PART THEREOF SHALL NOT IN ANY WAY SUBJECT FCBP TO ANY COST OR DAMAGES FOR ANY ERROR OR OMISSION CONTAINED THEREIN.

No.	REVISION	DATE	BY
1	CLIENT UPDATE	3-10-11	DS

REVISIONS

RADFORD UNIVERSITY
RADFORD, VA
WHITING-TURNER CONTRACTING

SCALE	AS SHOWN
DRAWN BY	DS
DEC PROJ. MGR.	
APPROVED BY	
QUOTE NO.	13148-2
DATE	12-29-10

COVER SHEET

SHEET No. C1

JOB NO. 10-2861

FILE NAME:
MEX. DATES:
DATE PLOTTED:

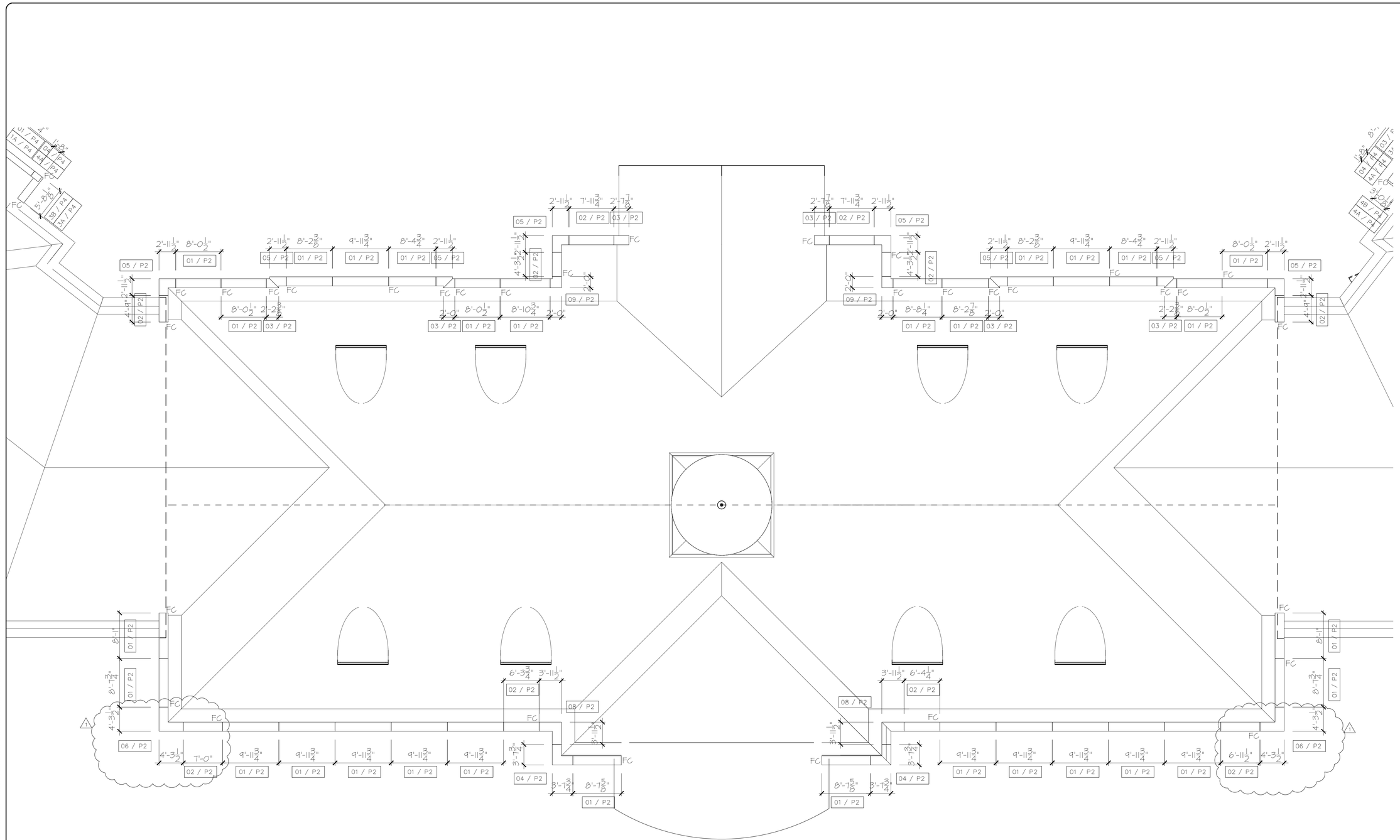

1 ROOF PLAN
SCALE : 1/8" = 1'-0"

PART LOCATION PLAN

AS SHOWN | 1

FIRST CLASS ARCHITECTURAL PRODUCTS
1-888-514-8141

FIRST CLASS
Building Products, Inc.
3600 DALLAS HIGHWAY
SUITE 230-387
MARIETTA GA 30064
WWW.FIRSTCLASSBP.COM

THESE PLANS AND THE DESIGNS CONTAINED THEREIN ARE THE SOLE PROPERTY *First Class Building Products* (HEREINAFTER DESIGNATED FCBP). THESE PLANS MAY NOT BE REPRODUCED OR USED WITHOUT WRITTEN PERMISSION OF DEC. UNAUTHORIZED USE SHALL INVITE A CLAIM FOR COMPENSATION BY FCBP. ALL FABRICATORS, CONTRACTORS INDICATED AND OTHERS UTILIZING THESE PLANS IN CONNECTION WITH THIS PROJECT ARE RESPONSIBLY FOR THEIR OWN MEASUREMENTS AND DIMENSIONS ON THE JOB. PLUMBING AND ELECTRICAL INFORMATION AND OUTLETS ARE FOR THE SOLE PURPOSE OF INDICATING THE REQUIREMENTS OF THE FIXTURES AND EQUIPMENT. STRUCTURAL FCBP ASSUMES NO RESPONSIBILITY FOR WORK DONE BY CONTRACTORS, NOR FOR ANY CHANGES MADE NECESSARY BY LOCAL BUILDING CODES, UNFORMATED CONDITIONS, OR BY ANY SUBSTITUTION OR CHANGES DONE BY OTHERS. THESE PLANS ARE ADVISED THAT THEY ARE RESPONSIBLE FOR EXAMINING AND BECOMING FAMILIAR WITH SAID GENERAL NOTES BEFORE COMMENCING ANY WORK DONE ON THIS PROJECT. ANY INCONSISTANCIES BETWEEN THESE PLANS, THE GENERAL NOTES, AND THE LOCAL BUILDING CODES, OR ORDINANCES, MUST IMMEDIATELY BE CALLED TO THE ATTENTION OF FCBP IN WRITING SO THAT ANY INCONSISTANCIES CAN BE RESOLVED. FCBP IS NOT RESPONSIBLE FOR ANY ARCHITECTURAL OR ENGINEERING DETAILS OR SPECIFICATIONS. THE USE BY ANY PERSON OR FIRM OF THESE PLANS OR ANY PART THEREOF SHALL NOT IN ANY WAY SUBJECT FCBP TO ANY COST OR DAMAGES FOR ANY ERROR OR OMISSION CONTAINED THEREIN.

No.	REVISION	DATE	BY
1	CLIENT UPDATE	3-10-11	DS

REVISIONS

RADFORD UNIVERSITY
RADFORD, VA
WHITING-TURNER CONTRATING

SCALE	AS SHOWN
DRAWN BY	DS
DEC PROJ. MGR.	
APPROVED BY	
QUOTE NO.	13148-2
DATE	12-29-10

PART LOCATION PLAN

SHEET No. F1

JOB NO. 10-2861

FILE NAME:
MEX. DATES:
DATE PLOTTED:

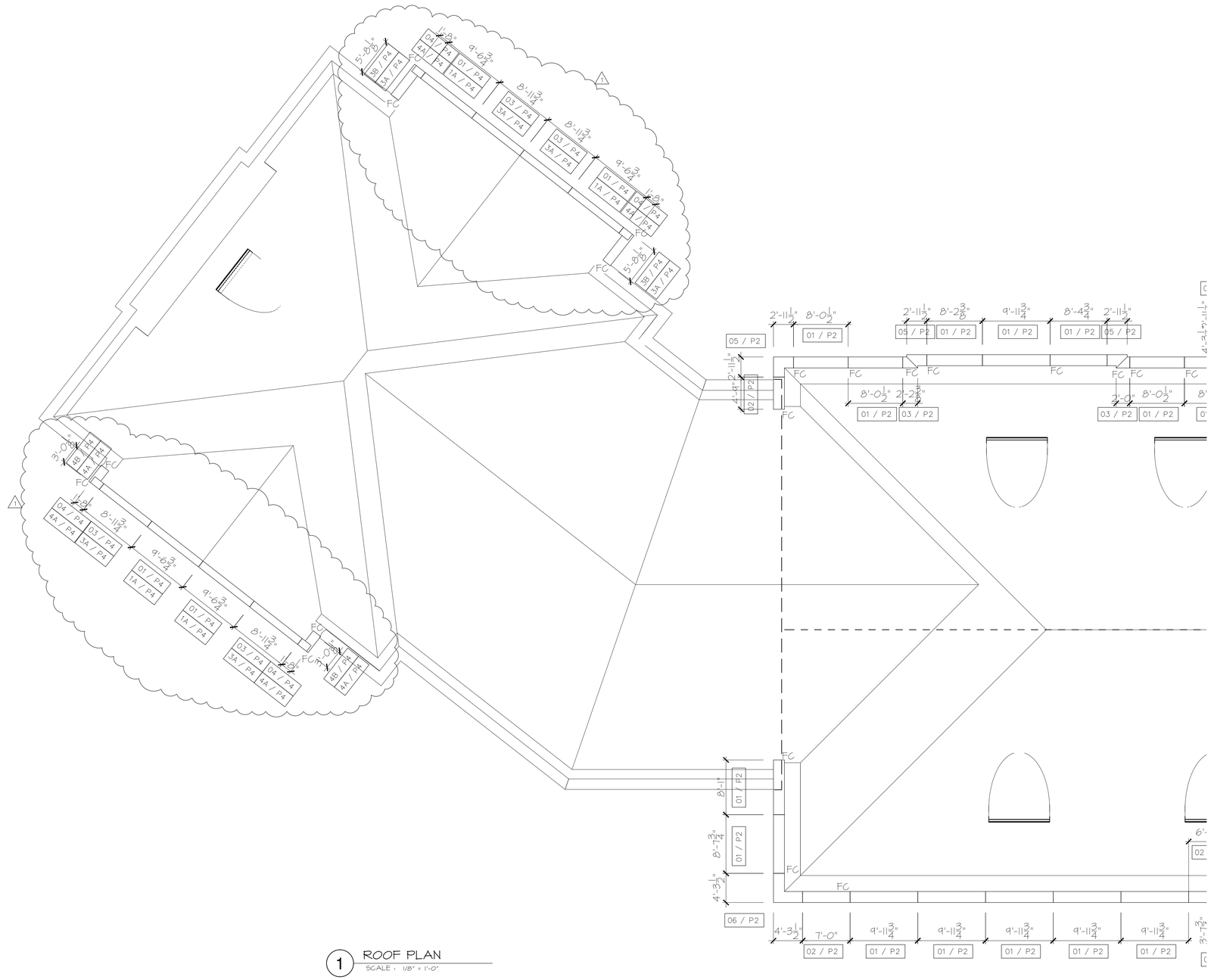

1 ROOF PLAN
SCALE : 1/8" = 1'-0"

PART LOCATION PLAN

AS SHOWN | 1

FIRST CLASS
ARCHITECTURAL PRODUCTS
1-888-514-8141

FIRST CLASS
Building Products, Inc.
3600 DALLAS HIGHWAY
SUITE 230-387
MARIETTA GA 30064
WWW.FIRSTCLASSBP.COM

THESE PLANS AND THE DESIGNS CONTAINED THEREIN ARE THE SOLE PROPERTY *First Class Building Products* (HEREINAFTER DESIGNATED FCBP). THESE PLANS MAY NOT BE REPRODUCED OR USED WITHOUT WRITTEN PERMISSION OF DEC. UNAUTHORIZED USE SHALL INVITE A CLAIM FOR COMPENSATION BY FCBP. ALL FABRICATORS, CONTRACTORS INDICATED AND OTHERS UTILIZING THESE PLANS IN CONNECTION WITH THIS PROJECT ARE RESPONSIBLE FOR THEIR OWN MEASUREMENTS AND DIMENSIONS ON THE JOB. PLUMBING AND ELECTRICAL INFORMATION AND OUTLETS ARE FOR THE SOLE PURPOSE OF INDICATING THE REQUIREMENTS OF THE FIXTURES AND EQUIPMENT., STRUCTURAL FCBP ASSUMES NO RESPONSIBILITY FOR WORK DONE BY CONTRACTORS, NOR FOR ANY CHANGES OR ANY CHANGES MADE NECESSARY BY LOCAL BUILDING CODES, ORDINANCES CONDITIONS, OR BY THE SUBSTITUTION OR CHANGES IN EQUIPMENT SHOWN ON THESE PLANS. REFERENCE IS MADE TO THE GENERAL NOTES WHICH ARE PART OF THESE PLANS, AND ALL PERSONS, CONTRACTORS AND OTHERS ARE RESPONSIBLE FOR COMPLIANCE WITH SAID GENERAL NOTES BEFORE COMMENCING ANY WORK DONE ON THIS PROJECT. ANY INCONSISTANCIES BETWEEN THESE PLANS, THE GENERAL NOTES, AND THE LOCAL BUILDING CODES, OR ORDINANCES, MUST IMMEDIATELY BE CALLED TO THE ATTENTION OF FCBP IN WRITING SO THAT ANY INCONSISTANCIES CAN BE RESOLVED. FCBP IS NOT RESPONSIBLE FOR ANY ARCHITECTURAL OR ENGINEERING DETAILS OR SPECIFICATIONS. THE USE BY ANY PERSON OR FIRM OF THESE PLANS OR ANY PART THEREOF SHALL NOT IN ANY WAY SUBJECT FCBP TO ANY COST OR DAMAGES FOR ANY ERROR OR OMISSION CONTAINED THEREIN.

No.	REVISION	DATE	BY
1	CLIENT UPDATE	3-10-11	DS

REVISIONS

RADFORD UNIVERSITY
RADFORD, VA
WHITING-TURNER CONTRATING

SCALE	AS SHOWN
DRAWN BY	DS
DEC PROJ. MGR.	
APPROVED BY	
QUOTE NO.	13148-2
DATE	12-29-10

PART LOCATION PLAN

SHEET No. F2

JOB NO. 10-2861

FILE NAME:
MEX. DATES:
DATE PLOTTED:

BORDER EDITION - JANUARY 2004 - BY: JAH

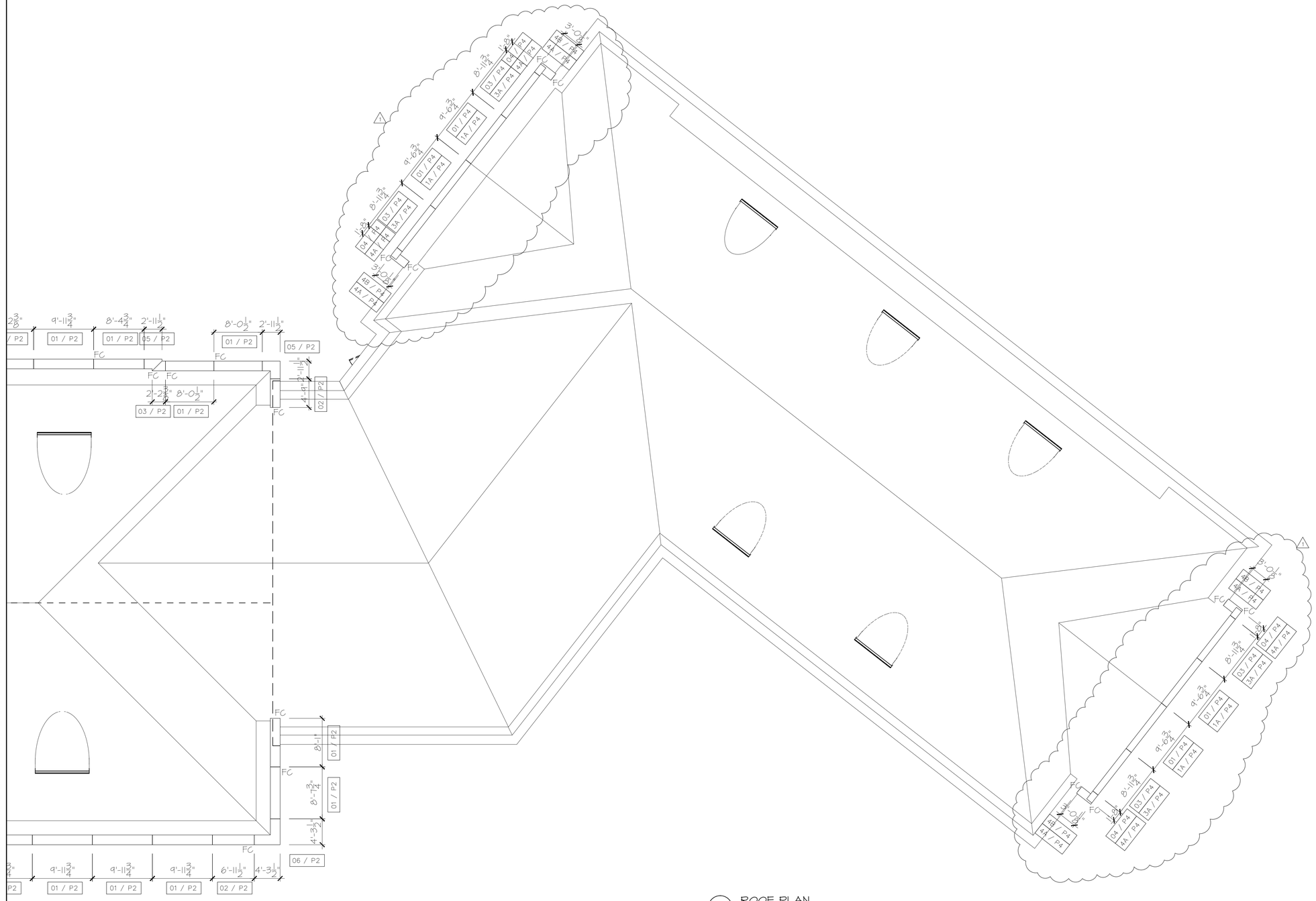

1 ROOF PLAN
SCALE : 1/8" = 1'-0"

PART LOCATION PLAN

AS SHOWN | 1

FIRST CLASS ARCHITECTURAL PRODUCTS
1-888-514-8141

FIRST CLASS
Building Products, Inc.
3600 DALLAS HIGHWAY
SUITE 230-387
MARIETTA GA 30064
WWW.FIRSTCLASSBP.COM

THESE PLANS AND THE DESIGNS CONTAINED THEREIN ARE THE SOLE PROPERTY *First Class Building Products* (HEREINAFTER DESIGNATED FCBP). THESE PLANS MAY NOT BE REPRODUCED OR USED WITHOUT WRITTEN PERMISSION OF DEC. UNAUTHORIZED USE SHALL INVITE A CLAIM FOR COMPENSATION BY FCBP. ALL FABRICATORS, CONTRACTORS INDICATED AND OTHERS UTILIZING THESE PLANS IN CONNECTION WITH THIS PROJECT ARE RESPONSIBLE FOR THEIR OWN MEASUREMENTS AND DIMENSIONS ON THE JOB. PLUMBING AND ELECTRICAL INFORMATION AND OUTLETS ARE FOR THE SOLE PURPOSE OF INDICATING THE REQUIREMENTS OF THE FIXTURES AND EQUIPMENT. STRUCTURAL FCBP ASSUMES NO RESPONSIBILITY FOR WORK DONE BY CONTRACTORS, NOR FOR ANY CHANGES MADE NECESSARY BY LOCAL BUILDING CODES, ORDINANCES CONDITIONS, FOR BY THE SUBSTITUTION OF OTHER EQUIPMENT. THESE PLANS ARE ADVISED THAT THEY ARE RESPONSIBLE FOR EXAMINING AND BECOMING FAMILIAR FABRICATORS, CONTRACTORS, AND ALL OTHER PERSONS UTILIZING THESE PLANS AND SPECIFICATIONS. ANY INCONSISTANCIES BETWEEN THESE PLANS, THE GENERAL NOTES, AND THE WITH SAID GENERAL NOTES BEFORE COMMENCING ANY WORK DONE ON THIS PROJECT. ANY INCONSISTANCIES BETWEEN THESE PLANS, THE GENERAL NOTES, AND THE LOCAL BUILDING CODES, OR ORDINANCES, MUST IMMEDIATELY BE CALLED TO THE ATTENTION OF FCBP IN WRITING SO THAT ANY INCONSISTANCIES CAN BE RESOLVED. FCBP IS NOT RESPONSIBLE FOR ANY ARCHITECTURAL OR ENGINEERING DETAILS OR SPECIFICATIONS. THE USE BY ANY PERSON OR FIRM OF THESE PLANS OR ANY PART THEREOF SHALL NOT IN ANY WAY SUBJECT FCBP TO ANY COST OR DAMAGES FOR ANY ERROR OR OMISSION CONTAINED THEREIN.

No.	REVISION	DATE	BY
1	CLIENT UPDATE	3-10-11	DS

REVISIONS

RADFORD UNIVERSITY
RADFORD, VA
WHITING-TURNER CONTRATING

SCALE	AS SHOWN
DRAWN BY	DS
DEC PROJ. MGR.	
APPROVED BY	
QUOTE NO.	13148-2
DATE	12-29-10

PART LOCATION PLAN

SHEET No. F3

JOB NO. 10-2861

SCREEN EDITION - JANUARY 2004 - REV. JAN
FILE NAME:
MEX. DATES:
DATE PLOTTED:

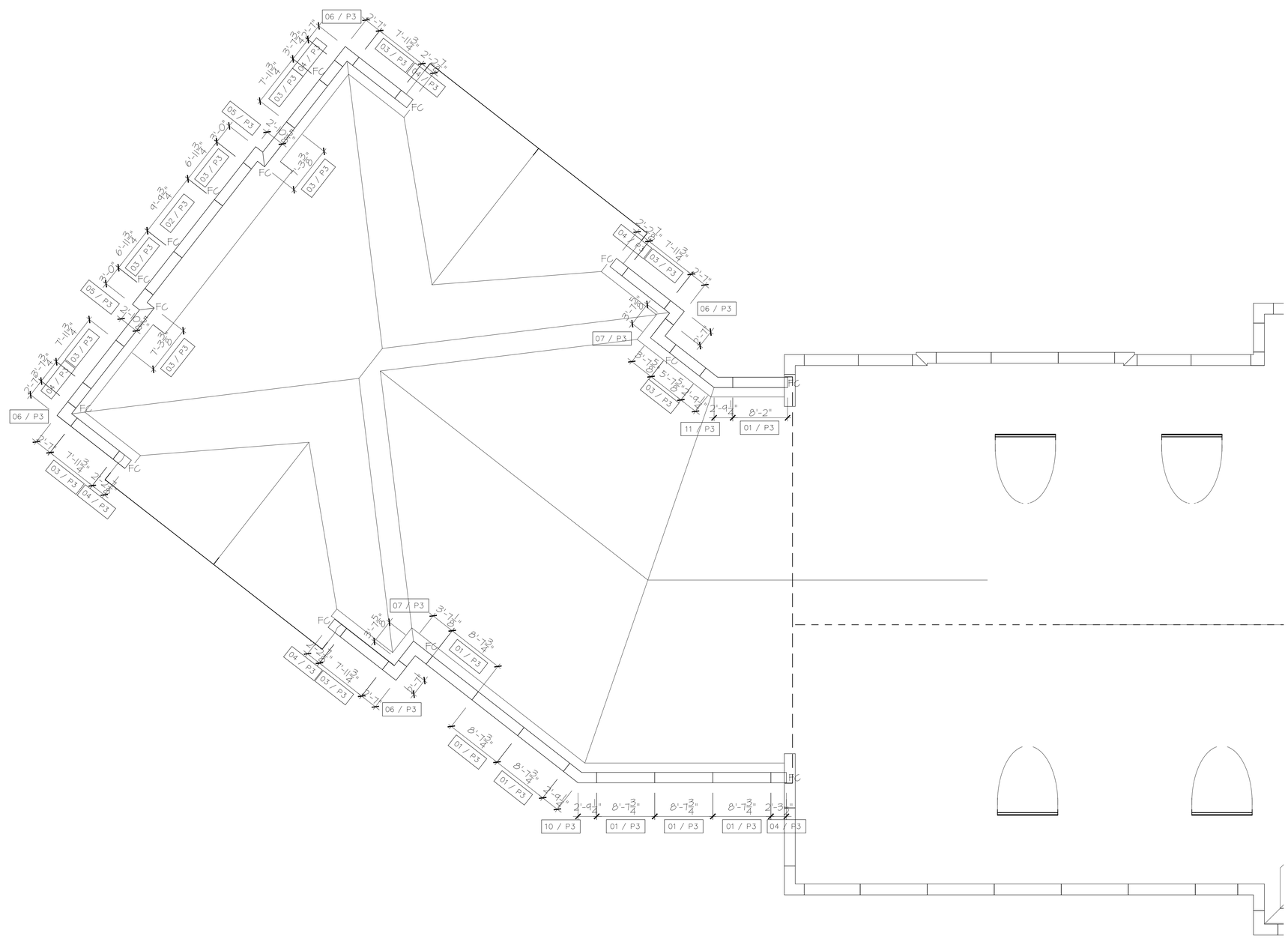

1 ROOF PLAN
SCALE : 1/8" = 1'-0"

FIRST CLASS ARCHITECTURAL PRODUCTS
1-888-314-8141

FIRST CLASS
Building Products, Inc.
3600 DALLAS HIGHWAY
SUITE 230-387
MARIETTA GA 30064
WWW.FIRSTCLASSBP.COM

THESE PLANS AND THE DESIGNS CONTAINED THEREIN ARE THE SOLE PROPERTY *First Class Building Products* (HEREINAFTER DESIGNATED FCBP). THESE PLANS MAY NOT BE REPRODUCED OR USED WITHOUT WRITTEN PERMISSION OF FCBP. UNAUTHORIZED USE SHALL INVITE A CLAIM FOR COMPENSATION BY FCBP. ALL FABRICATORS, CONTRACTORS INDICATED AND OTHERS UTILIZING THESE PLANS IN CONNECTION WITH THIS PROJECT ARE RESPONSIBLE FOR THEIR OWN MEASUREMENTS AND DIMENSIONS ON THE JOB. PLUMBING AND ELECTRICAL INFORMATION AND OUTLETS ARE FOR THE SOLE PURPOSE OF INDICATING THE REQUIREMENTS OF THE FIXTURES AND EQUIPMENT. STRUCTURAL FCBP ASSUMES NO RESPONSIBILITY FOR WORK DONE BY CONTRACTORS, NOR FOR ANY CHANGES MADE NECESSARY BY LOCAL BUILDING CODES, ORDINANCES CONDITIONS, OR BY THE SUBSTITUTION OR CHANGES IN EQUIPMENT SHOWN ON THESE PLANS. REFERENCE IS MADE TO THE GENERAL NOTES WHICH ARE PART OF THESE PLANS, AND FURNISHED CONTRACTORS AND ALL OTHERS UTILIZING THESE PLANS ARE ASSUMED TO BE FAMILIAR WITH SAID GENERAL NOTES BEFORE COMMENCING ANY WORK. ANY INCONSISTANCIES BETWEEN THESE PLANS, THE GENERAL NOTES, AND THE LOCAL BUILDING CODES, OR ORDINANCES, MUST IMMEDIATELY BE CALLED TO THE ATTENTION OF FCBP IN WRITING SO THAT ANY INCONSISTANCIES CAN BE RESOLVED. FCBP IS NOT RESPONSIBLE FOR ANY ARCHITECTURAL OR ENGINEERING DETAILS OR SPECIFICATIONS. THE USE BY ANY PERSON OR FIRM OF THESE PLANS OR ANY PART THEREOF SHALL NOT IN ANY WAY SUBJECT FCBP TO ANY COST OR DAMAGES FOR ANY ERROR OR OMISSION CONTAINED THEREIN.

No.	REVISION	DATE	BY
1	CLIENT UPDATE	3-10-11	DS

REVISIONS

RADFORD UNIVERSITY
RADFORD, VA
WHITING-TURNER CONTRATING

SCALE	AS SHOWN
DRAWN BY	DS
DEC PROJ. MGR.	
APPROVED BY	
QUOTE NO.	13148-2
DATE	12-29-10

PART LOCATION PLAN

SHEET No. F4

JOB NO. 10-2861

PART LOCATION PLAN

AS SHOWN | 1

BORDER EDITION - JANUARY 2004 - BY: JAH
FILE NAME:
MEX. DATES:
DATE PLOTTED:

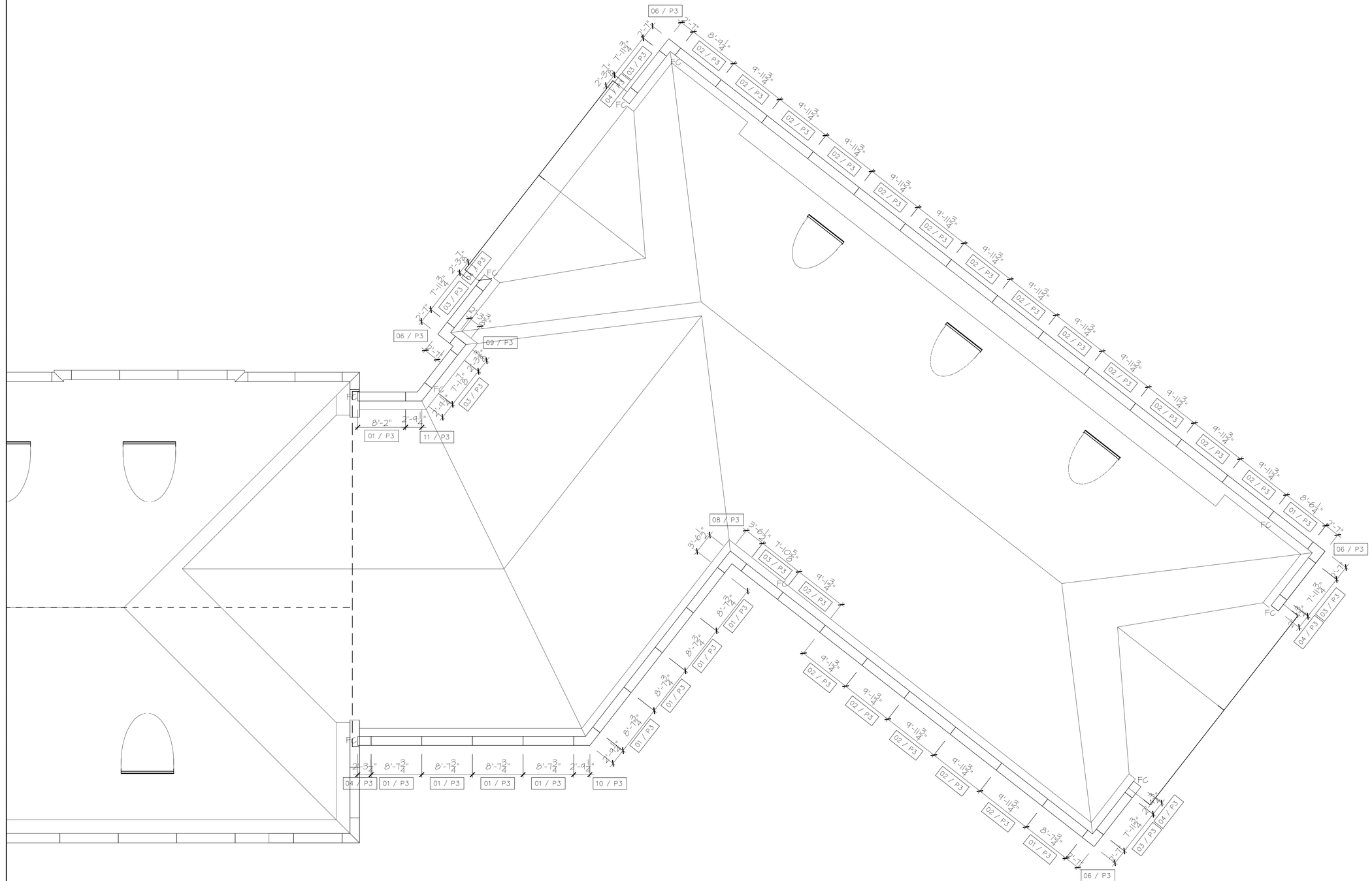

1 ROOF PLAN
SCALE : 1/8" = 1'-0"

FIRST CLASS
ARCHITECTURAL PRODUCTS
1-888-514-8141

FIRST CLASS
Building Products, Inc.
3600 DALLAS HIGHWAY
SUITE 230-387
MARIETTA GA 30064
WWW.FIRSTCLASSBP.COM

THESE PLANS AND THE DESIGNS CONTAINED THEREIN ARE THE SOLE PROPERTY *First Class Building Products* (HEREINAFTER DESIGNATED FCBP). THESE PLANS MAY NOT BE REPRODUCED OR USED WITHOUT WRITTEN PERMISSION OF DEC. UNAUTHORIZED USE SHALL INVITE A CLAIM FOR COMPENSATION BY FCBP. ALL FABRICATORS, CONTRACTORS INDICATED AND OTHERS UTILIZING THESE PLANS IN CONNECTION WITH THIS PROJECT ARE RESPONSIBLE FOR THEIR OWN MEASUREMENTS AND DIMENSIONS ON THE JOB. PLUMBING AND ELECTRICAL INFORMATION AND OUTLETS ARE FOR THE SOLE PURPOSE OF INDICATING THE REQUIREMENTS OF THE FIXTURES AND EQUIPMENT. STRUCTURAL FCBP ASSUMES NO RESPONSIBILITY FOR WORK DONE BY CONTRACTORS NOR FOR ANY CHANGES MADE NECESSARY BY LOCAL BUILDING CODES, ORDINANCES, CONDITIONS, OR ACTUAL CONDITIONS DIFFERING FROM THOSE SHOWN ON THESE PLANS. ANY DEVIATIONS MADE IN THESE PLANS MUST BE APPROVED BY FCBP. ALL FABRICATORS, CONTRACTORS, AND ALL OTHER PERSONS UTILIZING THESE PLANS ARE ADVISED THAT THEY ARE RESPONSIBLE FOR EXAMINING AND BECOMING FAMILIAR WITH SAID GENERAL NOTES BEFORE COMMENCING ANY WORK DONE ON THIS PROJECT. ANY INCONSISTANCIES BETWEEN THESE PLANS, THE GENERAL NOTES, AND THE LOCAL BUILDING CODES, OR ORDINANCES, MUST IMMEDIATELY BE CALLED TO THE ATTENTION OF FCBP IN WRITING SO THAT ANY INCONSISTANCIES CAN BE RESOLVED. FCBP IS NOT RESPONSIBLE FOR ANY ARCHITECTURAL OR ENGINEERING DETAILS OR SPECIFICATIONS. THE USE BY ANY PERSON OR FIRM OF THESE PLANS OR ANY PART THEREOF SHALL NOT IN ANY WAY SUBJECT FCBP TO ANY COST OR DAMAGES FOR ANY ERROR OR OMISSION CONTAINED THEREIN.

No.	REVISION	DATE	BY
1	CLIENT UPDATE	3-10-11	DS

REVISIONS

RADFORD UNIVERSITY
RADFORD, VA
WHITING-TURNER CONTRATING

SCALE	AS SHOWN
DRAWN BY	DS
DEC PROJ. MGR.	
APPROVED BY	
QUOTE NO.	13148-2
DATE	12-29-10

PART LOCATION PLAN

SHEET No. F5

JOB NO. 10-2861

PART LOCATION PLAN | AS SHOWN | 1

FILE NAME:
MEX. DATES:
DATE PLOTTED:

BORDER EDITION - JANUARY 2004 BY: JAH

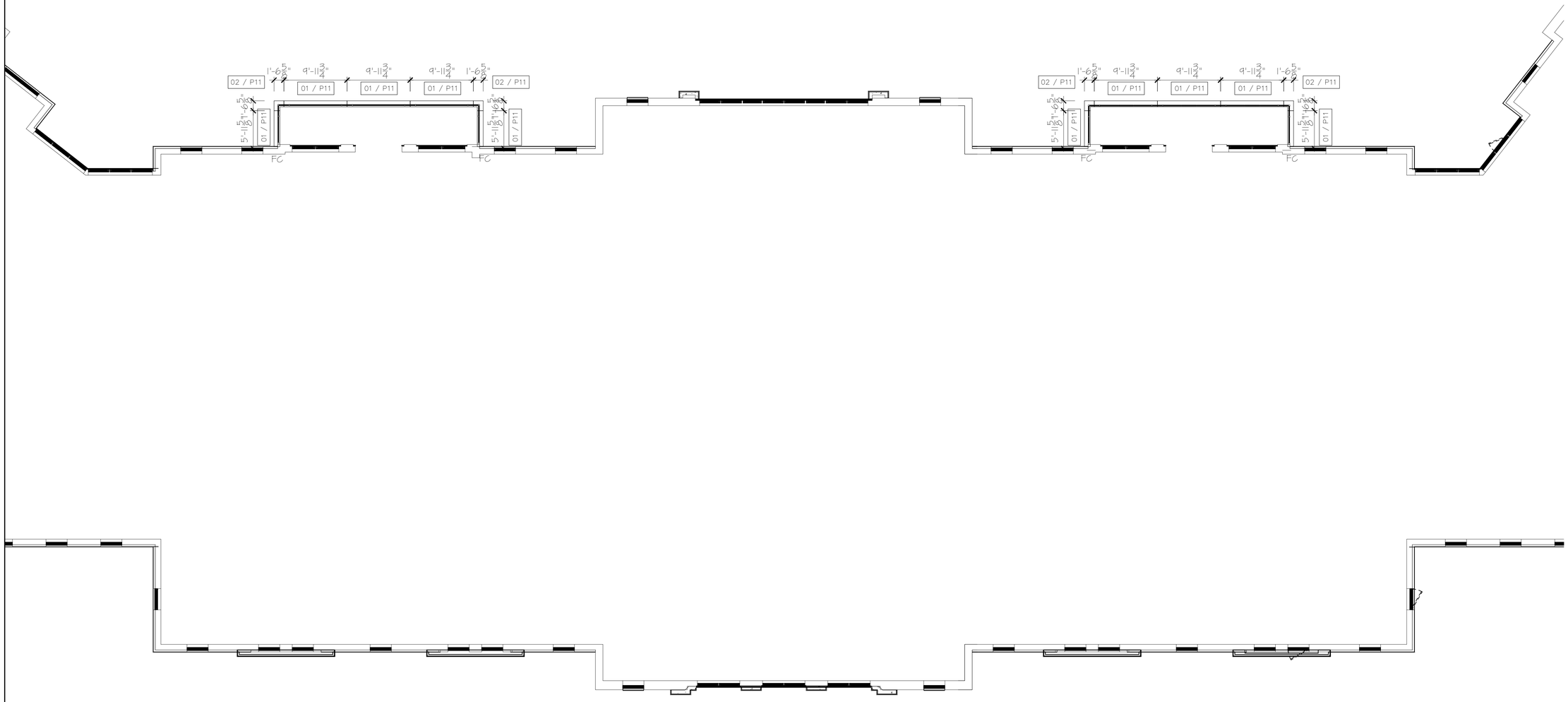

1 PLAN VIEW
SCALE : 1/8" = 1'-0"

PART LOCATION PLAN

AS SHOWN | 1

FIRST CLASS
ARCHITECTURAL PRODUCTS
1-888-314-8141

FIRST CLASS
Building Products, Inc.
3600 DALLAS HIGHWAY
SUITE 230-387
MARIETTA GA 30064
WWW.FIRSTCLASSBP.COM

THESE PLANS AND THE DESIGNS CONTAINED THEREIN ARE THE SOLE PROPERTY *First Class Building Products* (HEREINAFTER DESIGNATED FCBP). THESE PLANS MAY NOT BE REPRODUCED OR USED WITHOUT WRITTEN PERMISSION OF DEC. UNAUTHORIZED USE SHALL INVITE A CLAIM FOR COMPENSATION BY FCBP. ALL FABRICATORS, CONTRACTORS INDICATED AND OTHERS UTILIZING THESE PLANS IN CONNECTION WITH THIS PROJECT ARE RESPONSIBLY FOR THEIR OWN MEASUREMENTS AND DIMENSIONS ON THE JOB. PLUMBING AND ELECTRICAL INFORMATION AND OUTLETS ARE FOR THE SOLE PURPOSE OF INDICATING THE REQUIREMENTS OF THE FIXTURES AND EQUIPMENT. STRUCTURAL FCBP ASSUMES NO RESPONSIBILITY FOR WORK DONE BY CONTRACTORS, NOR FOR ANY CHANGES MADE NECESSARY BY LOCAL BUILDING CODES, ORDINANCES CONDITIONS, FIELD CONDITIONS OR OTHERWISE. CHANGES TO THESE PLANS MUST BE APPROVED IN WRITING BY FCBP. ALL FABRICATORS, CONTRACTORS, AND ALL OTHER PERSONS UTILIZING THESE PLANS ARE ADVISED THAT THEY ARE RESPONSIBLE FOR CLAIMING AND BECOMING FAMILIAR WITH SAID GENERAL NOTES BEFORE COMMENCING ANY WORK DONE ON THIS PROJECT. ANY INCONSISTANCIES BETWEEN THESE PLANS, THE GENERAL NOTES, AND THE LOCAL BUILDING CODES, OR ORDINANCES, MUST IMMEDIATELY BE CALLED TO THE ATTENTION OF FCBP IN WRITING SO THAT ANY INCONSISTANCIES CAN BE RESOLVED. FCBP IS NOT RESPONSIBLE FOR ANY ARCHITECTURAL OR ENGINEERING DETAILS OR SPECIFICATIONS. THE USE BY ANY PERSON OR FIRM OF THESE PLANS OR ANY PART THEREOF SHALL NOT IN ANY WAY SUBJECT FCBP TO ANY COST OR DAMAGES FOR ANY ERROR OR OMISSION CONTAINED THEREIN.

No.	REVISION	DATE	BY
1	CLIENT UPDATE	3-10-11	DS

REVISIONS

RADFORD UNIVERSITY
RADFORD, VA
WHITING-TURNER CONTRATING

SCALE	AS SHOWN
DRAWN BY	DS
DEC PROJ. MGR.	
APPROVED BY	
QUOTE NO.	13148-2
DATE	12-29-10

PART LOCATION PLAN

SHEET No. F6

JOB NO. 10-2861

FILE NAME:
MEX. DATES:
DATE PLOTTED:

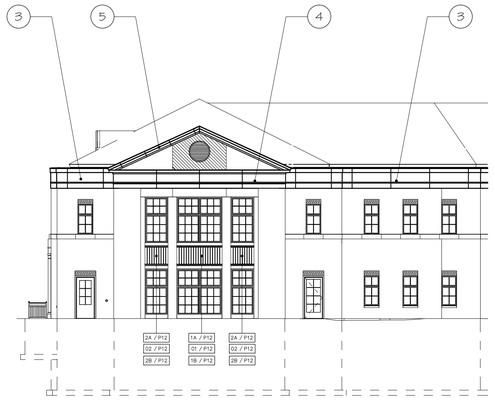

2 SOUTH WEST ELEVATION
SCALE : 1/16" = 1'-0"

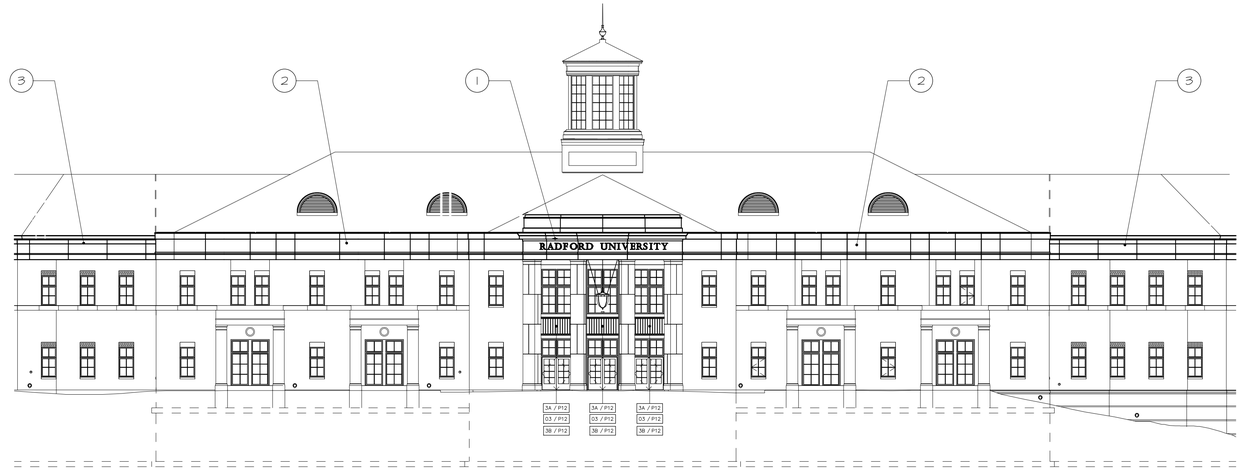

1 SOUTH ELEVATION
SCALE : 1/16" = 1'-0"

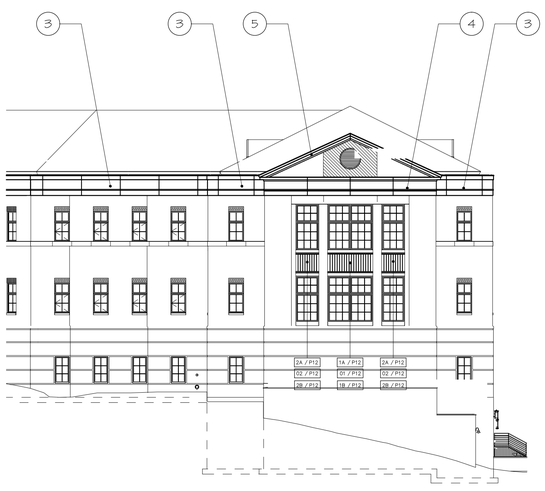

4 SOUTH EAST ELEVATION
SCALE : 1/16" = 1'-0"

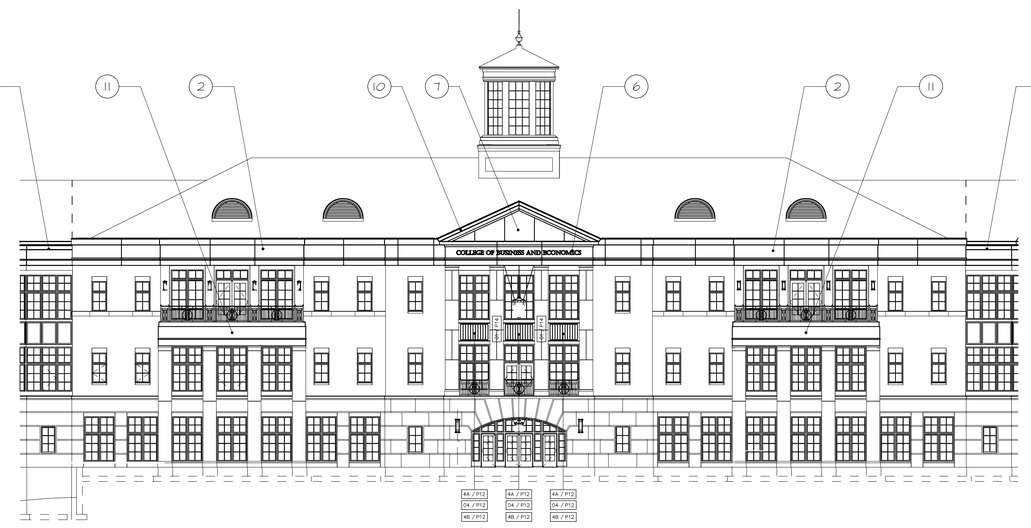

3 NORTH ELEVATION
SCALE : 1/16" = 1'-0"

FIRST CLASS
ARCHITECTURAL PRODUCTS
1-888-514-8141

FIRST CLASS
Building Products, Inc.
3600 DALLAS HIGHWAY
SUITE 230-387
MARIETTA GA 30064
WWW.FIRSTCLASSBP.COM

THESE PLANS AND THE DESIGNS CONTAINED THEREIN ARE THE SOLE PROPERTY Fcbp (HEREINAFTER DESIGNATED FCBP). THESE PLANS MAY NOT BE REPRODUCED OR USED WITHOUT WRITTEN PERMISSION OF FCBP. UNAUTHORIZED USE SHALL INVITE A CLAIM FOR COMPENSATION BY FCBP. ALL FABRICATORS, CONTRACTORS INDICATED AND OTHERS UTILIZING THESE PLANS IN CONNECTION WITH THIS PROJECT ARE RESPONSIBLE FOR THEIR OWN MEASUREMENTS AND DIMENSIONS ON THE JOB. PLUMBING AND ELECTRICAL INFORMATION AND OUTLETS ARE FOR THE SOLE PURPOSE OF INDICATING THE REQUIREMENTS OF THE FIXTURES AND EQUIPMENT. STRUCTURAL ELEMENTS SHOWN MAY ALSO BE REQUIRED FOR OTHER PURPOSES. FCBP DOES NOT WARRANT THE SUITABILITY OF THESE PLANS FOR ANY USE OTHER THAN THE ORIGINAL PROJECT FOR WHICH THEY WERE PREPARED, AND ANY REUSE WITHOUT WRITTEN VERIFICATION OR ADAPTATION BY FCBP IS AT THE USER'S SOLE RISK AND WITHOUT LIABILITY OR LEGAL EXPOSURE TO FCBP. ALL PRINTS OF PLANS AND SPECIFICATIONS ISSUED BY FCBP ARE TO BE RETURNED UPON REQUEST. REFERENCE IS MADE TO THE GENERAL NOTES WHICH ARE PART OF THESE PLANS AND OR IN THE SUBSTITUTION OR CHANGES IN EQUIPMENT SHOWN ON THESE PLANS. THESE PLANS ARE ADVISED THAT THEY ARE RESPONSIBLE FOR EXAMINING AND BECOMING FAMILIAR FABRICATORS, CONTRACTORS, AND ALL OTHER PERSONS UTILIZING THESE PLANS ARE ADVISED THAT THEY ARE RESPONSIBLE FOR EXAMINING AND BECOMING FAMILIAR WITH SAID GENERAL NOTES BEFORE COMMENCING ANY WORK DONE ON THIS PROJECT. ANY INCONSISTANCIES BETWEEN THESE PLANS, THE GENERAL NOTES, AND THE LOCAL BUILDING CODES, OR ORDINANCES, MUST IMMEDIATELY BE CALLED TO THE ATTENTION OF FCBP IN WRITING SO THAT ANY INCONSISTANCIES CAN BE RESOLVED. FCBP IS NOT RESPONSIBLE FOR ANY ARCHITECTURAL OR ENGINEERING DETAILS OR SPECIFICATIONS. THE USE BY ANY PERSON OR FIRM OF THESE PLANS OR ANY PART THEREOF SHALL NOT IN ANY WAY SUBJECT FCBP TO ANY COST OR DAMAGES FOR ANY ERROR OR OMISSION CONTAINED THEREIN.

No.	REVISION	DATE	BY
1	CLIENT UPDATE	3-10-11	DS

REVISIONS

RADFORD UNIVERSITY
RADFORD, VA
WHITING-TURNER CONTRATING

SCALE	AS SHOWN
DRAWN BY	DS
DEC PROJ. MGR.	
APPROVED BY	
QUOTE NO.	13148-2
DATE	12-29-10

PART LOCATION ELEVATIONS

SHEET No. F7

JOB NO. 10-2861

PART LOCATION ELEVATIONS

AS SHOWN | 1

BORDER EDITION - JANUARY 2004 - BY: JAH
FILE NAME:
MEX. DATES:
DATE PLOTTED:

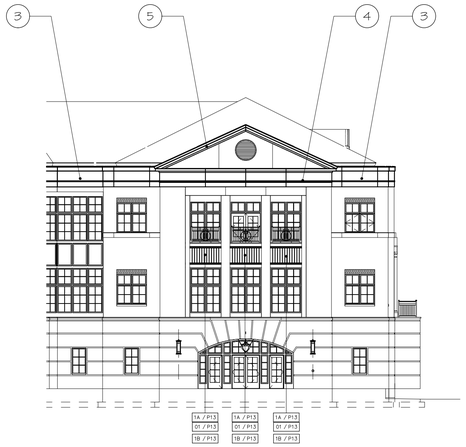

2 NORTH EAST ELEVATION
SCALE : 1/16" = 1'-0"

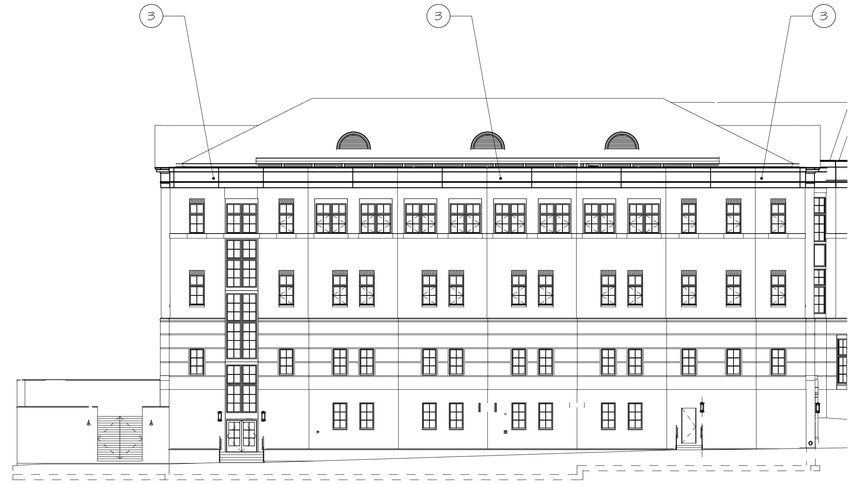

1 EAST WING
NORTH EAST ELEVATION
SCALE : 1/16" = 1'-0"

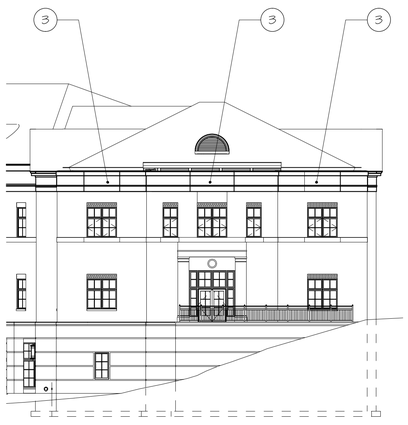

4 WEST WING
NORTH WEST ELEVATION
SCALE : 1/16" = 1'-0"

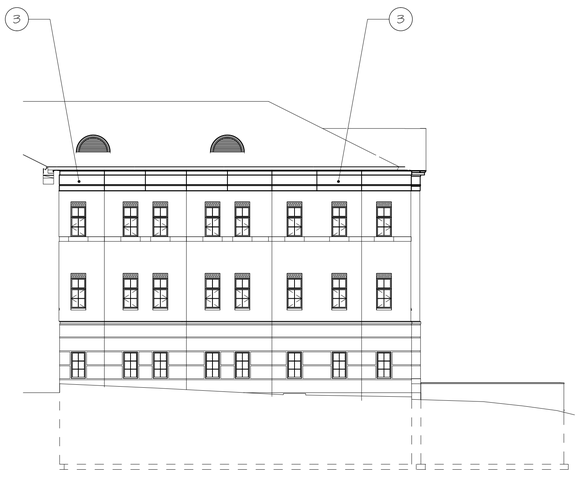

4 EAST WING
SOUTH WEST ELEVATION
SCALE : 1/16" = 1'-0"

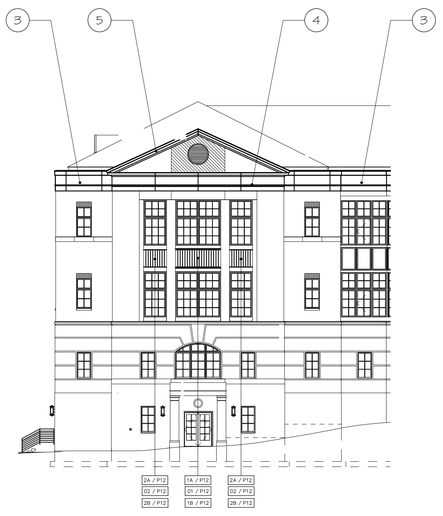

3 NORTH WEST ELEVATION
SCALE : 1/16" = 1'-0"

FIRST CLASS
ARCHITECTURAL PRODUCTS
1-888-514-8141

FIRST CLASS
Building Products, Inc.
3600 DALLAS HIGHWAY
SUITE 230-387
MARIETTA GA 30064
WWW.FIRSTCLASSBP.COM

THESE PLANS AND THE DESIGNS CONTAINED THEREIN ARE THE SOLE PROPERTY *First Class Building Products* (HEREINAFTER DESIGNATED FCBP). THESE PLANS MAY NOT BE REPRODUCED OR USED WITHOUT WRITTEN PERMISSION OF DEC. UNAUTHORIZED USE SHALL INVITE A CLAIM FOR COMPENSATION BY FCBP. ALL FABRICATORS, CONTRACTORS INDICATED AND OTHERS UTILIZING THESE PLANS IN CONNECTION WITH THIS PROJECT ARE RESPONSIBLE FOR THEIR OWN MEASUREMENTS AND DIMENSIONS ON THE JOB. PLUMBING AND ELECTRICAL INFORMATION AND OUTLETS ARE FOR THE SOLE PURPOSE OF INDICATING THE REQUIREMENTS OF THE FIXTURES AND EQUIPMENT., STRUCTURAL FCBP ASSUMES NO RESPONSIBILITY FOR WORK DONE BY CONTRACTORS, NOR FOR ANY CHANGES MADE NECESSARY BY LOCAL BUILDING CODES, ORDINANCES CONDITIONS, OR FOR ANY WORK DONE WITHOUT THE ISSUANCE OF PROPER PERMITS. THESE PLANS ARE TO BE USED ONLY FOR THE PURPOSE INDICATED. FABRICATORS, CONTRACTORS, AND ALL OTHER PERSONS UTILIZING THESE PLANS ARE RESPONSIBLE FOR EXAMINING AND BECOMING FAMILIAR WITH SAID GENERAL NOTES BEFORE COMMENCING ANY WORK DONE ON THIS PROJECT. ANY INCONSISTANCIES BETWEEN THESE PLANS, THE GENERAL NOTES, AND THE LOCAL BUILDING CODES, OR ORDINANCES, MUST IMMEDIATELY BE CALLED TO THE ATTENTION OF FCBP IN WRITING SO THAT ANY INCONSISTANCIES CAN BE RESOLVED. FCBP IS NOT RESPONSIBLE FOR ANY ARCHITECTURAL OR ENGINEERING DETAILS OR SPECIFICATIONS. THE USE BY ANY PERSON OR FIRM OF THESE PLANS OR ANY PART THEREOF SHALL NOT IN ANY WAY SUBJECT FCBP TO ANY COST OR DAMAGES FOR ANY ERROR OR OMISSION CONTAINED THEREIN.

No.	REVISION	DATE	BY
1	CLIENT UPDATE	3-10-11	DS

REVISIONS

RADFORD UNIVERSITY
RADFORD, VA
WHITING-TURNER CONTRATING

SCALE	AS SHOWN
DRAWN BY	DS
DEC PROJ. MGR.	
APPROVED BY	
QUOTE NO.	13148-2
DATE	12-29-10

PART LOCATION ELEVATIONS

SHEET No. F8

JOB NO. 10-2861

PART LOCATION ELEVATIONS

AS SHOWN | 1

FILE NAME:
MEX. DATES:
DATE PLOTTED:

BOILERS EDITION - JANUARY 2004 BY: JAH

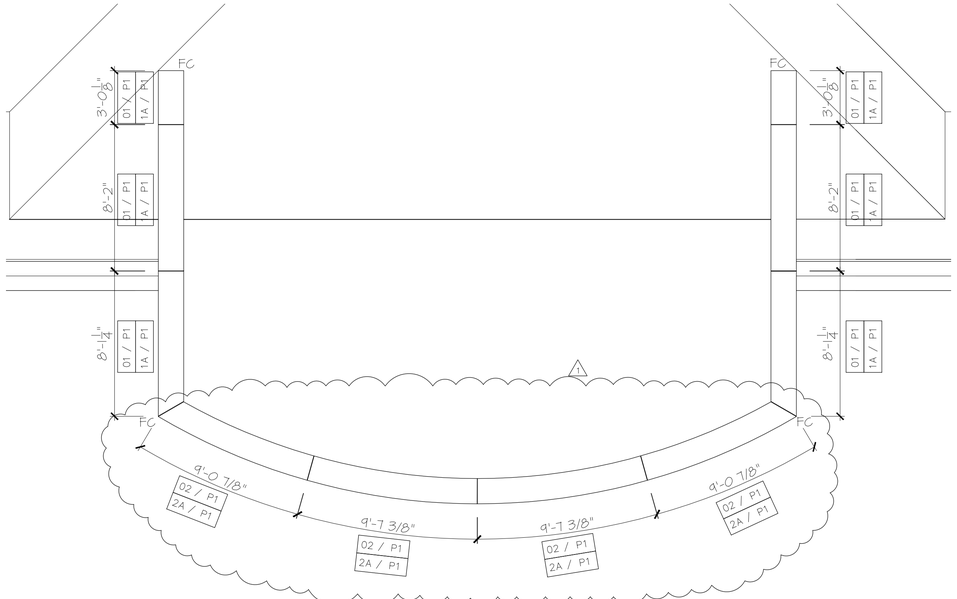

2 PLAN VIEW @ SOUTH PORTICO
SCALE : 1/4" = 1'-0"

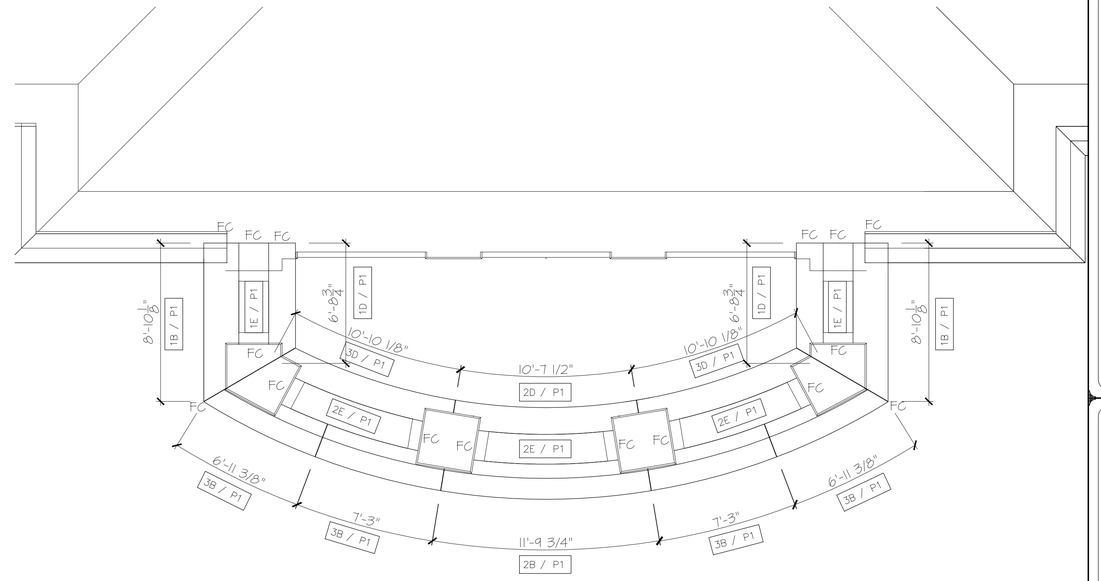

1 REFLECTIVE PLAN VIEW @ SOUTH PORTICO
SCALE : 1/4" = 1'-0"

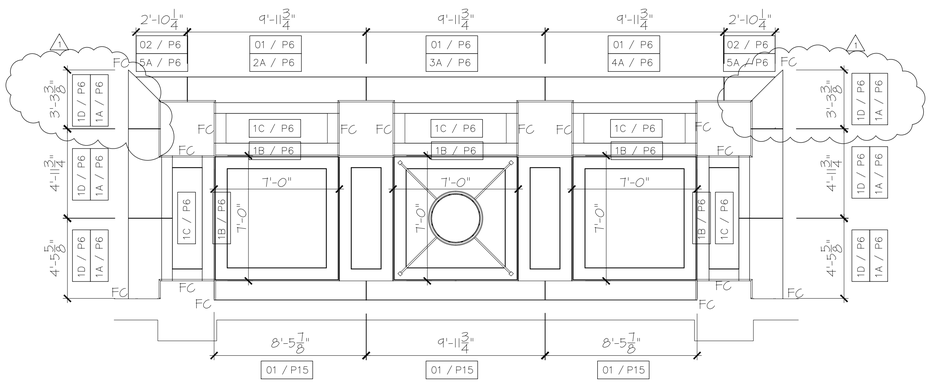

4 REFLECTIVE PLAN VIEW @ NORTH PORTICO
SCALE : 1/4" = 1'-0"

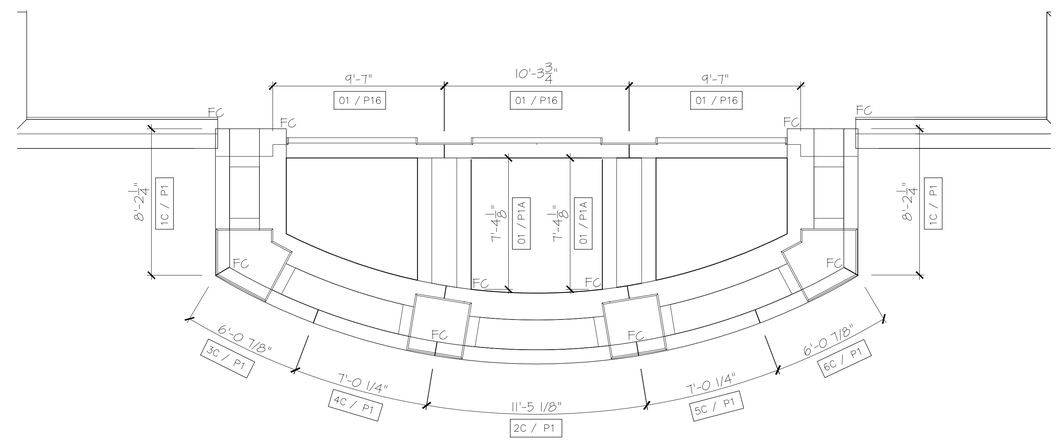

3 REFLECTIVE PLAN VIEW @ SOUTH PORTICO
SCALE : 1/4" = 1'-0"

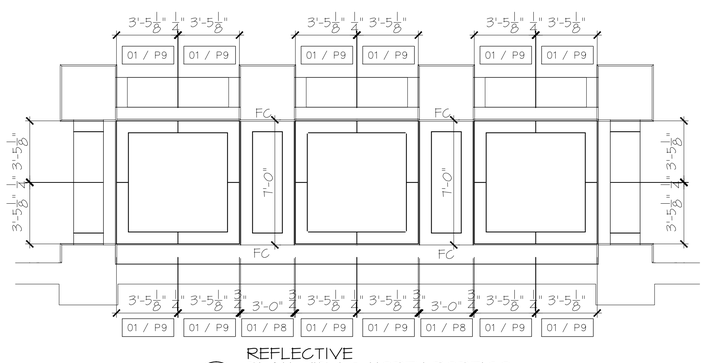

5 REFLECTIVE PLAN VIEW @ NORTH PORTICO
SCALE : 1/4" = 1'-0"

PART LOCATION PLANS

AS SHOWN | 1

FIRST CLASS ARCHITECTURAL PRODUCTS
1-888-514-8141

FIRST CLASS
Building Products, Inc.
3600 DALLAS HIGHWAY
SUITE 230-387
MARIETTA GA 30064
WWW.FIRSTCLASSBP.COM

THESE PLANS AND THE DESIGNS CONTAINED THEREIN ARE THE SOLE PROPERTY First Class Building Products (HEREINAFTER DESIGNATED FCBP). THESE PLANS MAY NOT BE REPRODUCED OR USED WITHOUT WRITTEN PERMISSION OF DEC. UNAUTHORIZED USE SHALL INVITE A CLAIM FOR COMPENSATION BY FCBP. ALL FABRICATORS, CONTRACTORS INDICATED AND OTHERS UTILIZING THESE PLANS IN CONNECTION WITH THIS PROJECT ARE RESPONSIBLE FOR THEIR OWN MEASUREMENTS AND DIMENSIONS ON THE JOB. PLUMBING AND ELECTRICAL INFORMATION AND OUTLETS ARE FOR THE SOLE PURPOSE OF INDICATING THE REQUIREMENTS OF THE FIXTURES AND EQUIPMENT. STRUCTURAL FCBP ASSUMES NO RESPONSIBILITY FOR WORK DONE BY CONTRACTORS, NOR FOR ANY CHANGES MADE NECESSARY BY LOCAL BUILDING CODES, ORDINANCES CONDITIONS, OR BY THE SUBSTITUTION OR CHANGES IN EQUIPMENT SHOWN ON THESE PLANS. REFERENCE IS MADE TO THE GENERAL NOTES WHICH ARE PART OF THESE PLANS, AND FURNISHING CONTRACTORS AND SUBCONTRACTORS SHALL FAMILIARIZE THEMSELVES WITH SAID GENERAL NOTES BEFORE COMMENCING ANY WORK DONE ON THIS PROJECT. ANY INCONSISTANCIES BETWEEN THESE PLANS, THE GENERAL NOTES, AND THE LOCAL BUILDING CODES, OR ORDINANCES MUST IMMEDIATELY BE CALLED TO THE ATTENTION OF FCBP IN WRITING SO THAT ANY INCONSISTANCIES CAN BE RESOLVED. FCBP IS NOT RESPONSIBLE FOR ANY ARCHITECTURAL OR ENGINEERING DETAILS OR SPECIFICATIONS. THE USE BY ANY PERSON OR FIRM OF THESE PLANS OR ANY PART THEREOF SHALL NOT IN ANY WAY SUBJECT FCBP TO ANY COST OR DAMAGES FOR ANY ERROR OR OMISSION CONTAINED THEREIN.

No.	REVISION	DATE	BY
1	CLIENT UPDATE	3-10-11	DS

REVISIONS

RADFORD UNIVERSITY
RADFORD, VA
WHITING-TURNER CONTRATING

SCALE	AS SHOWN
DRAWN BY	DS
DEC PROJ. MGR.	
APPROVED BY	
QUOTE NO.	13148-2
DATE	12-29-10

PART LOCATION PLANS

SHEET No. F9

JOB NO. 10-2861

FILE NAME:
MEX. DATES:
DATE PLOTTED:

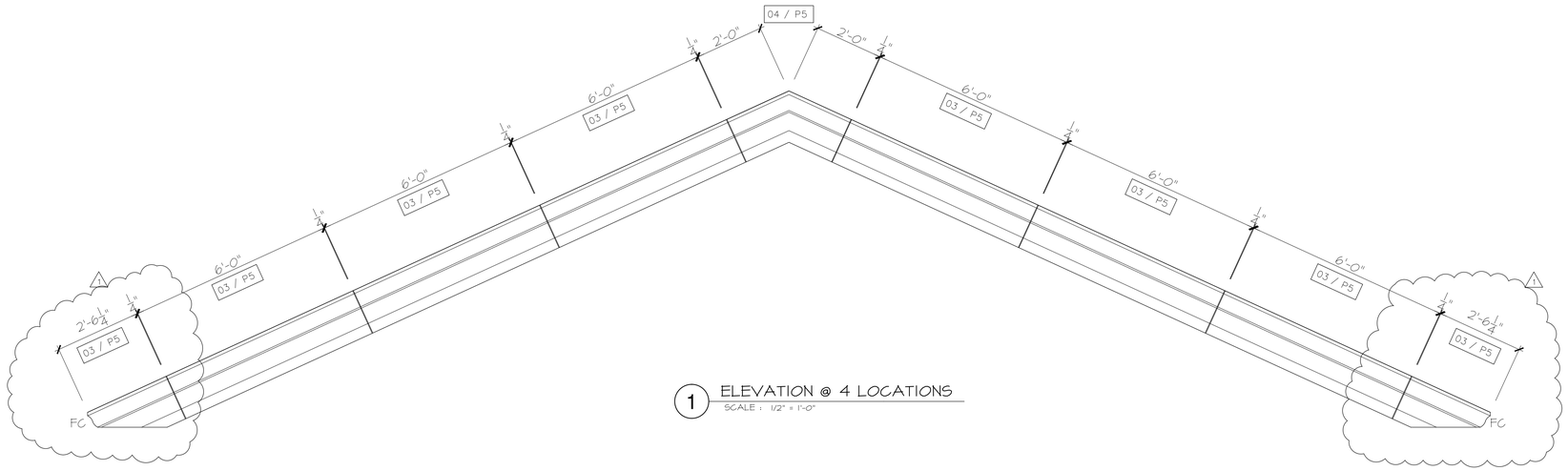

1 ELEVATION @ 4 LOCATIONS
SCALE : 1/2" = 1'-0"

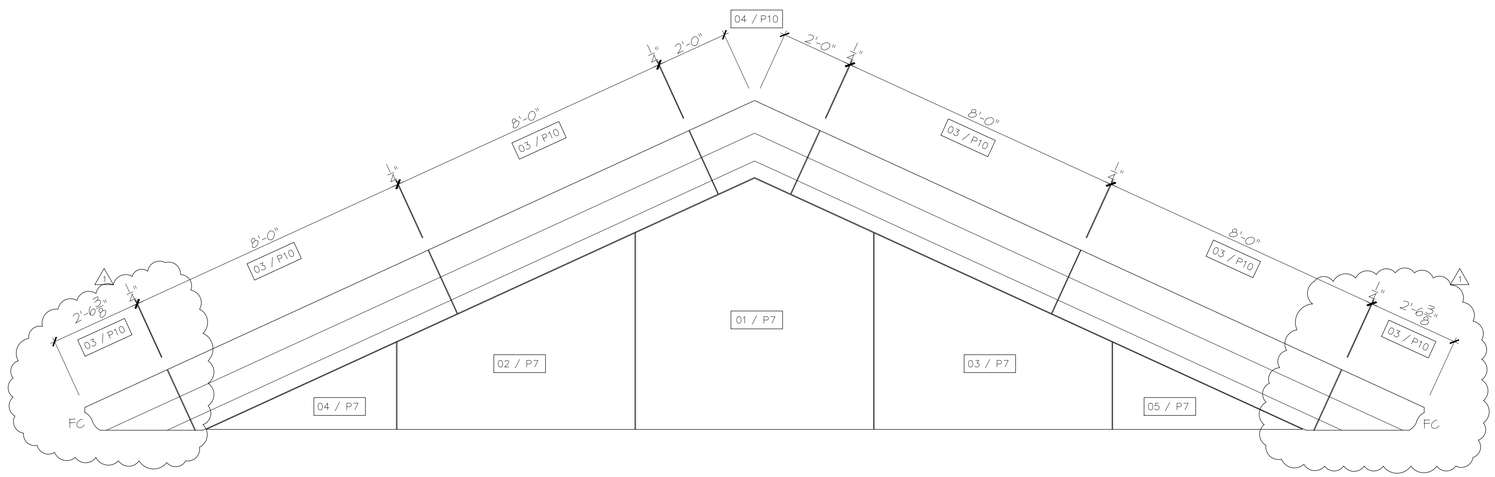

2 ELEVATION @ NORTH PORTICO
SCALE : 1/2" = 1'-0"

3 ELEVATION @ SOUTH PORTICO
SCALE : 1/2" = 1'-0"

PART LOCATION ELEVATION | AS SHOWN | 1

FIRST CLASS
ARCHITECTURAL PRODUCTS
1-888-514-8141

FIRST CLASS
Building Products, Inc.
3600 DALLAS HIGHWAY
SUITE 230-387
MARIETTA GA 30064
WWW.FIRSTCLASSBP.COM

THESE PLANS AND THE DESIGNS CONTAINED THEREIN ARE THE SOLE PROPERTY (First Class Building Products (HEREINAFTER DESIGNATED FCBP)). THESE PLANS MAY NOT BE REPRODUCED OR USED WITHOUT WRITTEN PERMISSION OF FCBP. UNAUTHORIZED USE SHALL INVITE A CLAIM FOR COMPENSATION BY FCBP. ALL FABRICATORS, CONTRACTORS AND OTHERS WHO DIRECT, SUPERVISE OR PERFORM WORK ON THESE PLANS AS FOREMEN, WORKMEN OR THE OTHERWISE, MUST ALSO BE FAMILIAR WITH PLUMBING AND ELECTRICAL INFORMATION AND OUTLETS ARE FOR THE SOLE PURPOSE OF INDICATING THE REQUIREMENTS OF THE FIXTURES AND EQUIPMENT, STRUCTURAL FCBP ASSUMES NO RESPONSIBILITY FOR WORK DONE BY CONTRACTORS, NOR FOR ANY CHANGES MADE NECESSARY BY LOCAL BUILDING CODES, ORDINANCES CONDITIONS, OR BY THE SUBSTITUTION OR CHANGES IN EQUIPMENT SHOWN ON THESE PLANS. REFERENCE IS MADE TO THE GENERAL NOTES WHICH ARE PART OF THESE PLANS, AND FABRICATORS, CONTRACTORS, AND ALL OTHER PERSONS UTILIZING THESE PLANS ARE ADVISED THAT THEY ARE RESPONSIBLE FOR EXAMINING AND BECOMING FAMILIAR WITH SAID GENERAL NOTES BEFORE COMMENCING ANY WORK DONE ON THIS PROJECT. ANY INCONSISTANCIES BETWEEN THESE PLANS, THE GENERAL NOTES, AND THE LOCAL BUILDING CODES, OR ORDINANCES, MUST IMMEDIATELY BE CALLED TO THE ATTENTION OF FCBP IN WRITING SO THAT ANY INCONSISTANCIES CAN BE RESOLVED. FCBP IS NOT RESPONSIBLE FOR ANY ARCHITECTURAL OR ENGINEERING DETAILS OR SPECIFICATIONS. THE USE BY ANY PERSON OR FIRM OF THESE PLANS OR ANY PART THEREOF SHALL BE DEEMED TO MEAN THAT SUCH PERSON OR FIRM HAS ACCEPTED THE TERMS OF THIS NOTICE.

No.	REVISION	DATE	BY
1	CLIENT UPDATE	3-10-11	DS

REVISIONS

RADFORD UNIVERSITY
RADFORD, VA
WHITING-TURNER CONTRATING

SCALE	AS SHOWN
DRAWN BY	DS
DEC PROJ. MGR.	
APPROVED BY	
QUOTE NO.	13148-2
DATE	12-29-10

PART LOCATION ELEVATION

SHEET No. F10
JOB NO. 10-2861

FILE NAME:
MEX. DATES:
DATE PLOTTED:

WHITING TURNER CONTRACTING

I HAVE REVIEWED THESE DRAWINGS AND THEY ARE APPROVED FOR PRODUCTION. MY SIGNATURE BELOW CONFIRMS MY UNDERSTANDING AND ACCEPTANCE OF THE FOLLOWING CONDITIONS.

1. ANY CHANGES TO THESE DRAWINGS NOT INITIALED BY ME WILL BE IGNORED BY FCBP.
2. ANY CHANGES TO THESE DRAWINGS MAY RESULT IN A PRICE ADJUSTMENT.
3. ANY UNCORRECTED ERRORS CONTAINED IN THESE DRAWINGS ARE MY RESPONSIBILITY.
4. ANY CHANGES TO THESE DRAWINGS WHICH CREATE UNCORRECTED ERRORS ARE MY RESPONSIBILITY.
5. FCBP HAS CONTRACTED TO SUPPLY THE MATERIAL QUANTITIES PRINTED ON THESE DRAWINGS. ANY ADDITIONAL MATERIAL WILL BE BILLED SEPARATELY FROM THE ORIGINAL PURCHASE ORDER.

SIGNATURE DATE

THIS ORDER CANNOT BE RELEASED FOR PRODUCTION WITHOUT YOUR SIGNATURE!

C

B

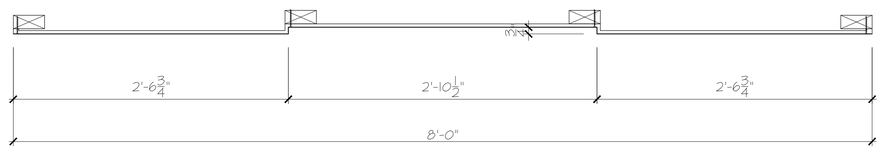

2 DETAIL SECTION
SCALE : 1 1/2" = 1'-0"
1E / P1
2E / P1 SIM

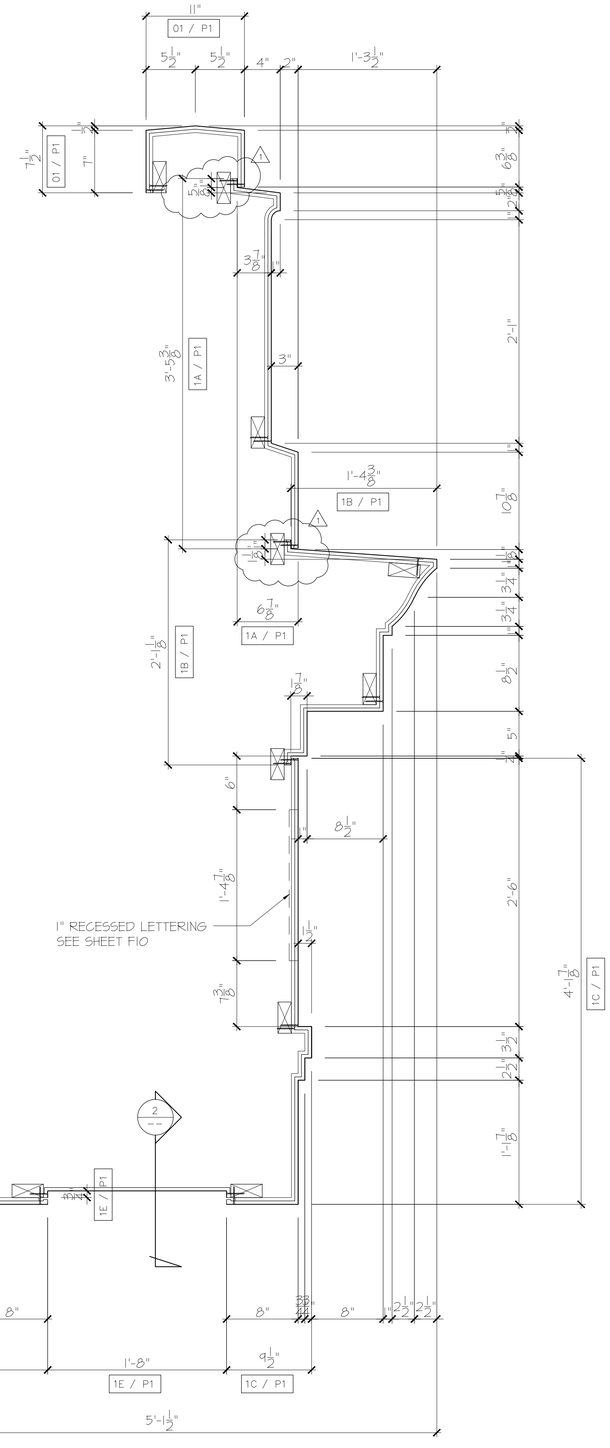

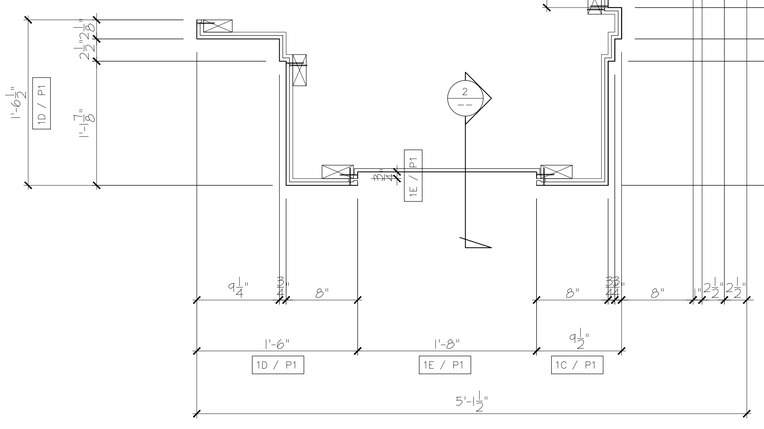

1 DETAIL SECTION
SCALE : 1 1/2" = 1'-0"

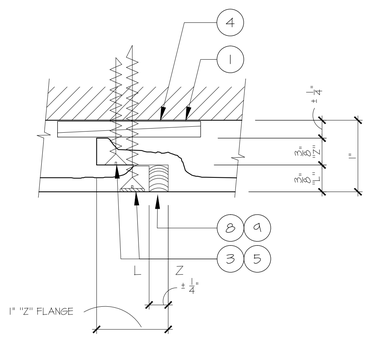

REQ'D. :

(6)	01 / P1	ECHO STONE CORNICE 7 1/2"H x 11"D 8'-2" STRAIGHT LENGTH	Z/L
(6)	1A / P1	ECHO STONE CORNICE 3'-5 3/8"H x 6 7/8"D 8'-2" STRAIGHT LENGTH	Z/L
(2)	1B / P1	ECHO STONE CORNICE 2'-1 1/8"H x 1'-4 3/8"D 9'-0" STRAIGHT LENGTH	Z/L
(2)	1C / P1	ECHO STONE CORNICE 4'-1 7/8"H x 9 1/2"D 8'-6" STRAIGHT LENGTH	Z/L
(2)	1D / P1	ECHO STONE CORNICE 1'-6 1/2"H x 1'-6"D 7'-0" STRAIGHT LENGTH	Z/L
(2)	1E / P1	ECHO STONE CORNICE 3/4"H x 1'-8"D 8'-0" STRAIGHT LENGTH	L/L
(4)	02 / P1	ECHO STONE CORNICE 7 1/2"H x 11"D 9'-5 3/4" ARC LENGTH	Z/L
(4)	2A / P1	ECHO STONE CORNICE 3'-5 3/8"H x 6 7/8"D 9'-7 3/8" ARC LENGTH	Z/L
(1)	2B / P1	ECHO STONE CORNICE 2'-1 1/8"H x 1'-4 3/8"D 11'-9 3/4" ARC LENGTH	Z/L
(1)	2C / P1	ECHO STONE CORNICE - W/LETTERING 4'-1 7/8"H x 9 1/2"D 11'-5 1/8" ARC LENGTH	Z/L
(1)	2D / P1	ECHO STONE CORNICE 1'-6 1/2"H x 1'-6"D 10'-7 1/2" ARC LENGTH	Z/L
(3)	2E / P1	ECHO STONE CORNICE 3/4"H x 1'-8"D 8'-6" ARC LENGTH	L/L
(4)	3B / P1	ECHO STONE CORNICE 2'-1 1/8"H x 1'-4 3/8"D 7'-3" ARC LENGTH	Z/L
(1)	3C / P1	ECHO STONE CORNICE - W/LETTERING 4'-1 7/8"H x 9 1/2"D 7'-0 1/4" ARC LENGTH	Z/L
(2)	3D / P1	ECHO STONE CORNICE 1'-6 1/2"H x 1'-6"D 11'-0" ARC LENGTH	Z/L
(1)	4C / P1	ECHO STONE CORNICE - W/LETTERING 4'-1 7/8"H x 9 1/2"D 7'-0 1/4" ARC LENGTH	Z/L
(1)	5C / P1	ECHO STONE CORNICE - W/LETTERING 4'-1 7/8"H x 9 1/2"D 7'-0 1/4" ARC LENGTH	Z/L
(1)	6C / P1	ECHO STONE CORNICE - W/LETTERING 4'-1 7/8"H x 9 1/2"D 7'-0 1/4" ARC LENGTH	Z/L

TOTAL: (44)

FIRST CLASS ARCHITECTURAL PRODUCTS
1-888-314-8141

FIRST CLASS
Building Products, Inc.
3600 DALLAS HIGHWAY
SUITE 230-387
MARIETTA GA 30064
WWW.FIRSTCLASSBP.COM

THESE PLANS AND THE DESIGNS CONTAINED THEREIN ARE THE SOLE PROPERTY First Class Building Products (HEREINAFTER DESIGNATED FCBP). THESE PLANS MAY NOT BE REPRODUCED OR USED WITHOUT WRITTEN PERMISSION OF FCC. UNAUTHORIZED USE SHALL INVITE A CLAIM FOR COMPENSATION BY FCBP. ALL FABRICATORS, CONTRACTORS INDICATED AND OTHERS UTILIZING THESE PLANS IN CONNECTION WITH THIS PROJECT ARE RESPONSIBLE FOR THEIR OWN MEASUREMENTS AND DIMENSIONS ON THE JOB PLANS AND DESIGNS. ALL DIMENSIONS, INCLUDING BUT NOT LIMITED TO, ARCHITECTURAL, STRUCTURAL AND MECHANICAL FCBP ASSUMES NO RESPONSIBILITY FOR WORK DONE BY CONTRACTORS, NOR FOR ANY CHANGES MADE NECESSARY BY LOCAL BUILDING CODES, ORDINANCES CONDITIONS, OR BY THE SUBSTITUTION OR CHANGES IN EQUIPMENT SHOWN ON THESE PLANS. REFERENCE IS MADE TO THE GENERAL NOTES WHICH ARE PART OF THESE PLANS, AND FABRICATORS, CONTRACTORS, AND ALL OTHER PERSONS UTILIZING THESE PLANS ARE ADVISED THAT THEY ARE RESPONSIBLE FOR EXAMINING AND BECOMING FAMILIAR WITH SAID GENERAL NOTES BEFORE COMMENCING ANY WORK DONE ON THIS PROJECT. ANY INCONSISTANCIES BETWEEN THESE PLANS, THE GENERAL NOTES, AND THE LOCAL BUILDING CODES, OR ORDINANCES, MUST IMMEDIATELY BE CALLED TO THE ATTENTION OF FCBP IN WRITING SO THAT ANY INCONSISTANCIES CAN BE RESOLVED. FCBP IS NOT RESPONSIBLE FOR ANY ARCHITECTURAL OR ENGINEERING DETAILS OR SPECIFICATIONS. THE USE BY ANY PERSON OR FIRM OF THESE PLANS OR ANY PART THEREOF SHALL NOT IN ANY WAY SUBJECT FCBP TO ANY COST OR DAMAGES FOR ANY ERROR OR OMISSION CONTAINED THEREIN.

No.	REVISION	DATE	BY
	CLIENT UPDATE	3-10-11	DS

REVISIONS

RADFORD UNIVERSITY
RADFORD, VA
WHITING-TURNER CONTRACTING

SCALE	AS SHOWN
DRAWN BY	DS
DEC PROJ. MGR.	
APPROVED BY	
QUOTE NO.	13148-2
DATE	12-29-10

ECHO STONE CORNICE

SHEET No. P1

JOB NO. 10-2861

DETAIL SECTION | FULL | A | (A) | ECHO STONE CORNICE | AS SHOWN | 1

BUDDIES EDITION - JANUARY 2009 BY: JAY
FILE NAME:
MEX. DATES:
DATE PLOTTED:

WHITING TURNER CONTRACTING

I HAVE REVIEWED THESE DRAWINGS AND THEY ARE APPROVED FOR PRODUCTION. MY SIGNATURE BELOW CONFIRMS MY UNDERSTANDING AND ACCEPTANCE OF THE FOLLOWING CONDITIONS.

1. ANY CHANGES TO THESE DRAWINGS NOT INITIALED BY ME WILL BE IGNORED BY FCBP.
2. ANY CHANGES TO THESE DRAWINGS MAY RESULT IN A PRICE ADJUSTMENT.
3. ANY UNCORRECTED ERRORS CONTAINED IN THESE DRAWINGS ARE MY RESPONSIBILITY.
4. ANY CHANGES TO THESE DRAWINGS WHICH CREATE UNCORRECTED ERRORS ARE MY RESPONSIBILITY.
5. FCBP HAS CONTRACTED TO SUPPLY THE MATERIAL QUANTITIES PRINTED ON THESE DRAWINGS. ANY ADDITIONAL MATERIAL WILL BE BILLED SEPARATELY FROM THE ORIGINAL PURCHASE ORDER.

SIGNATURE DATE

THIS ORDER CANNOT BE RELEASED FOR PRODUCTION WITHOUT YOUR SIGNATURE!

C

B

A

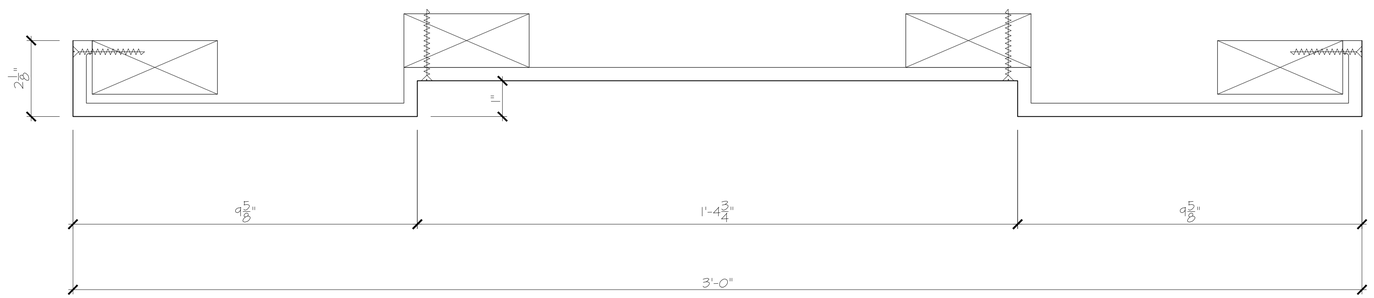

1 DETAIL SECTION
SCALE : 6" = 1'-0"

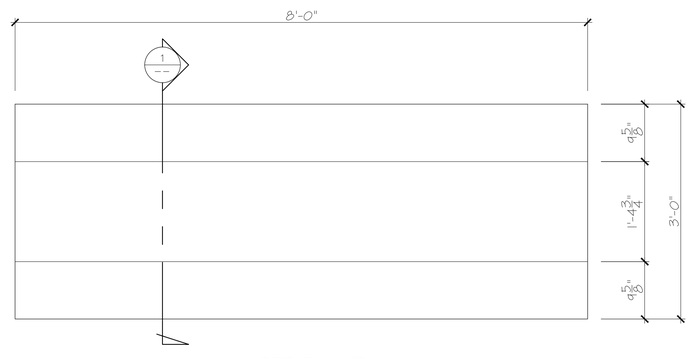

2 REFLECTIVE PLAN VIEW
SCALE : 1" = 1'-0"

REQ'D. :(2) 01 / P1A ECHO STONE SOFFIT PANEL
2 1/8"H x 3'-0"D
8'-0" STRAIGHT LENGTH

TOTAL: (2)

(A-2) ECHO STONE SOFFIT PANEL AS SHOWN 1

FILE NAME:
MEX. DATES:
DATE PLOTTED:

BORDER EDITOR - JANUARY 2004 BY: JAH

FIRST CLASS ARCHITECTURAL PRODUCTS
1-888-514-8141

FIRST CLASS
Building Products, Inc.
3600 DALLAS HIGHWAY
SUITE 230-387
MARIETTA GA 30064
WWW.FIRSTCLASSBP.COM

THESE PLANS AND THE DESIGNS CONTAINED THEREIN ARE THE SOLE PROPERTY First Class Building Products (HEREINAFTER DESIGNATED FCBP). THESE PLANS MAY NOT BE REPRODUCED OR USED WITHOUT WRITTEN PERMISSION OF EEC. UNAUTHORIZED USE SHALL INVITE A CLAIM FOR COMPENSATION BY FCBP. ALL FABRICATORS, CONTRACTORS, INDICATED AND OTHERS UTILIZING THESE PLANS IN CONJUNCTION WITH THIS PROJECT ARE RESPONSIBLE FOR THEIR OWN MEASUREMENTS, DIMENSIONS, OR THE COORDINATION OF DIMENSIONS, PLANS, OR DETAILS WITH THE ACTUAL FIELD CONDITIONS. FCBP ASSUMES NO RESPONSIBILITY FOR WORK DONE BY CONTRACTORS, NOR FOR ANY CHANGES MADE NECESSARY BY LOCAL BUILDING CODES, ORDINANCES CONDITIONS, OR BY THE SUBSTITUTION OR CHANGES IN EQUIPMENT SHOWN ON THESE PLANS. REFERENCE IS MADE TO THE GENERAL NOTES WHICH ARE PART OF THESE PLANS, AND FABRICATORS, CONTRACTORS, AND ALL OTHER PERSONS UTILIZING THESE PLANS ARE ADVISED THAT THEY ARE RESPONSIBLE FOR EXAMINING AND BECOMING FAMILIAR WITH SAID GENERAL NOTES BEFORE COMMENCING ANY WORK DONE ON THIS PROJECT. ANY INCONSISTANCIES BETWEEN THESE PLANS, THE GENERAL NOTES, AND THE LOCAL BUILDING CODES, OR ORDINANCES, MUST IMMEDIATELY BE CALLED TO THE ATTENTION OF FCBP IN WRITING SO THAT ANY INCONSISTANCIES CAN BE RESOLVED. FCBP IS NOT RESPONSIBLE FOR ANY ARCHITECTURAL OR ENGINEERING DETAILS OR SPECIFICATIONS. THE USE BY ANY PERSON OR FIRM OF THESE PLANS OR ANY PART THEREOF SHALL NOT IN ANY WAY SUBJECT FCBP TO ANY COST OR DAMAGES FOR ANY ERROR OR OMISSION CONTAINED THEREIN.

No.	REVISION	DATE	BY
1	CLIENT UPDATE	3-10-11	DS

REVISIONS

RADFORD UNIVERSITY
RADFORD, VA
WHITING-TURNER CONTRACTING

SCALE	AS SHOWN
DRAWN BY	DS
DEC PROJ. MGR.	
APPROVED BY	
QUOTE NO.	13148-2
DATE	12-29-10

ECHO STONE SOFFIT PANEL

SHEET No.
P1A
JOB NO. 10-2861

WHITING TURNER CONTRACTING

I HAVE REVIEWED THESE DRAWINGS AND THEY ARE APPROVED FOR PRODUCTION. MY SIGNATURE BELOW CONFIRMS MY UNDERSTANDING AND ACCEPTANCE OF THE FOLLOWING CONDITIONS.

1. ANY CHANGES TO THESE DRAWINGS NOT INITIALED BY ME WILL BE IGNORED BY FCBP.
2. ANY CHANGES TO THESE DRAWINGS MAY RESULT IN A PRICE ADJUSTMENT.
3. ANY UNCORRECTED ERRORS CONTAINED IN THESE DRAWINGS ARE MY RESPONSIBILITY.
4. ANY CHANGES TO THESE DRAWINGS WHICH CREATE UNCORRECTED ERRORS ARE MY RESPONSIBILITY.
5. FCBP HAS CONTRACTED TO SUPPLY THE MATERIAL QUANTITIES PRINTED ON THESE DRAWINGS. ANY ADDITIONAL MATERIAL WILL BE BILLED SEPARATELY FROM THE ORIGINAL PURCHASE ORDER.

SIGNATURE DATE

THIS ORDER CANNOT BE RELEASED FOR PRODUCTION WITHOUT YOUR SIGNATURE!

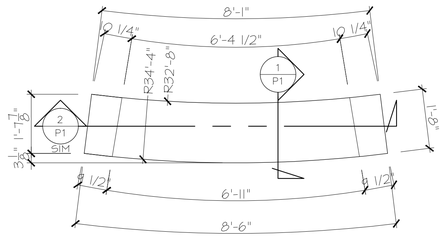

12 REFLECTIVE PLAN VIEW 2E / P1
SCALE : 1/2" = 1'-0"

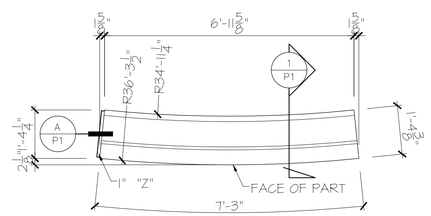

13 REFLECTIVE PLAN VIEW 3B / P1
SCALE : 1/2" = 1'-0"

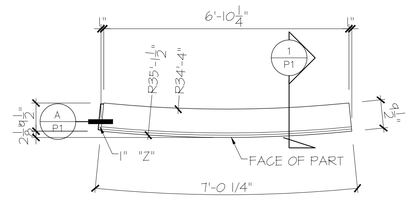

14 REFLECTIVE PLAN VIEW 3C / P1 | 4C / P1 | 5C / P1 | 6C / P1
SCALE : 1/2" = 1'-0"

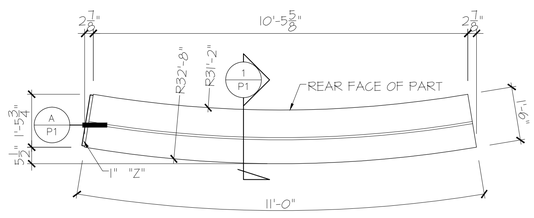

15 REFLECTIVE PLAN VIEW 3D / P1
SCALE : 1/2" = 1'-0"

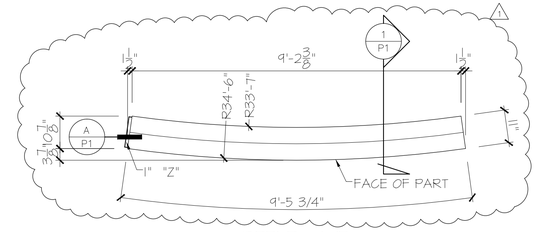

7 REFLECTIVE PLAN VIEW 02 / P1
SCALE : 1/2" = 1'-0"

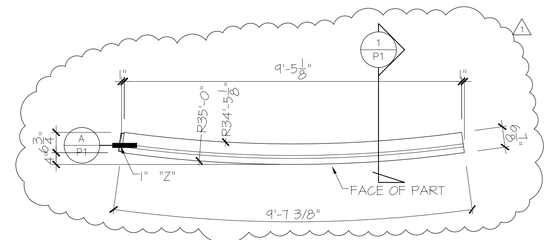

8 REFLECTIVE PLAN VIEW 2A / P1
SCALE : 1/2" = 1'-0"

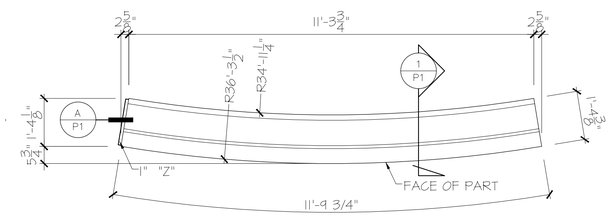

9 REFLECTIVE PLAN VIEW 2B / P1
SCALE : 1/2" = 1'-0"

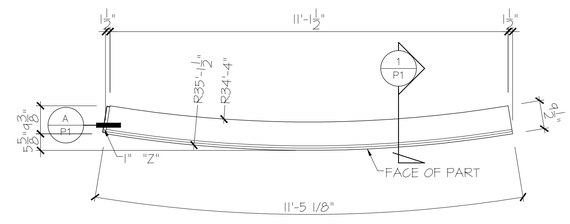

10 REFLECTIVE PLAN VIEW 2C / P1
SCALE : 1/2" = 1'-0"

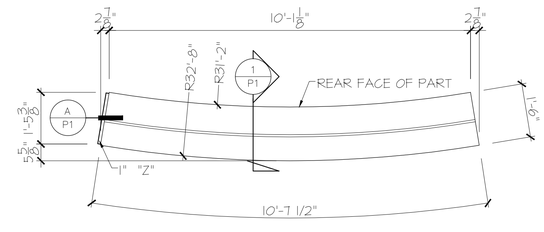

11 REFLECTIVE PLAN VIEW 2D / P1
SCALE : 1/2" = 1'-0"

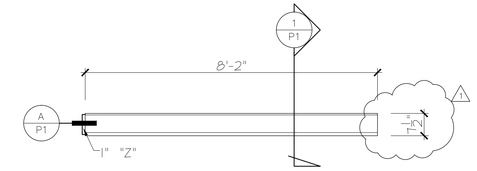

1 ELEVATION 01 / P1
SCALE : 1/2" = 1'-0"

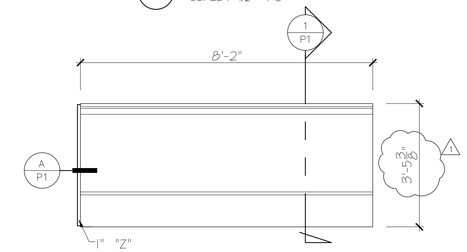

2 ELEVATION 1A / P1
SCALE : 1/2" = 1'-0"

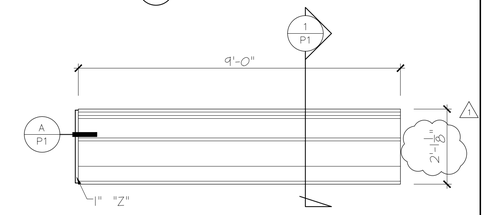

3 ELEVATION 1B / P1
SCALE : 1/2" = 1'-0"

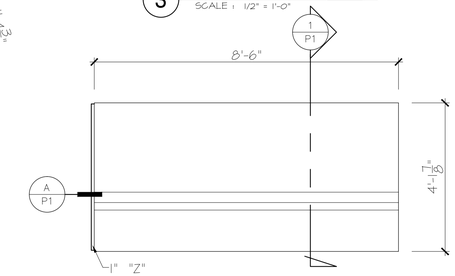

4 ELEVATION 1C / P1
SCALE : 1/2" = 1'-0"

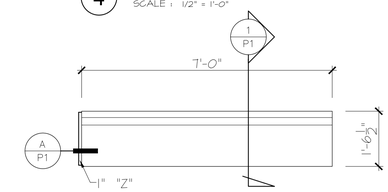

5 ELEVATION 1D / P1
SCALE : 1/2" = 1'-0"

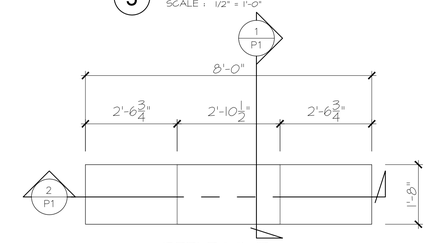

6 REFLECTIVE PLAN VIEW 1E / P1
SCALE : 1/2" = 1'-0"

FIRST CLASS ARCHITECTURAL PRODUCTS
1-888-514-8141

FIRST CLASS
Building Products, Inc.
3600 DALLAS HIGHWAY
SUITE 230-387
MARIETTA GA 30064
WWW.FIRSTCLASSBP.COM

THESE PLANS AND THE DESIGNS CONTAINED THEREIN ARE THE SOLE PROPERTY First Class Building Products (HEREINAFTER DESIGNATED FCBP). THESE PLANS MAY NOT BE REPRODUCED OR USED WITHOUT WRITTEN PERMISSION OF DEC. UNAUTHORIZED USE SHALL INVITE A CLAIM FOR COMPENSATION BY FCBP. ALL FABRICATORS, CONTRACTORS INDICATED AND OTHERS UTILIZING THESE PLANS IN CONNECTION WITH THIS PROJECT ARE RESPONSIBLY FOR THEIR OWN MEASUREMENTS AND DIMENSIONS ON THE JOB. PLUMBING AND ELECTRICAL INFORMATION AND OUTLETS ARE FOR THE SOLE PURPOSE OF INDICATING THE REQUIREMENTS OF THE FIXTURES AND EQUIPMENT. STRUCTURAL FEATURES AND RESPONSIBILITY FOR CORRECT PLACEMENT OF OUTLETS AND FIXTURES ARE NOT INCLUDED. ALL DIMENSIONS SHOWN ON THESE PLANS, REFERENCE IS MADE TO THE GENERAL NOTES WHICH ARE PART OF THESE PLANS, AND OR BY THE SUBSTITUTION OR CHANGES IN EQUIPMENT SHOWN ON THESE PLANS ARE ADVISED THAT THEY ARE RESPONSIBLE FOR EXAMINING AND BECOMING FAMILIAR WITH SAID GENERAL NOTES BEFORE COMMENCING ANY WORK DONE ON THIS PROJECT. ANY INCONSISTANCIES BETWEEN THESE PLANS, THE GENERAL NOTES, AND THE LOCAL BUILDING CODES, OR ORDINANCES, MUST IMMEDIATELY BE CALLED TO THE ATTENTION OF FCBP IN WRITING SO THAT ANY INCONSISTANCIES CAN BE RESOLVED. FCBP IS NOT RESPONSIBLE FOR ANY ARCHITECTURAL OR ENGINEERING DETAILS OR SPECIFICATIONS. THE USE BY ANY PERSON OR FIRM OF THESE PLANS OR ANY PART THEREOF SHALL NOT IN ANY WAY SUBJECT FCBP TO ANY COST OR DAMAGES FOR ANY ERROR OR OMISSION CONTAINED THEREIN.

No.	REVISION	DATE	BY
1	CLIENT UPDATE	3-10-11	DS

REVISIONS

RADFORD UNIVERSITY
RADFORD, VA
WHITING-TURNER CONTRACTING

SCALE	AS SHOWN
DRAWN BY	DS
DEC PROJ. MGR.	
APPROVED BY	
QUOTE NO.	13148-2
DATE	12-29-10

ECHO STONE CORNICE

SHEET No. P1-CONT.
JOB NO. 10-2861

(A) ECHO STONE CORNICE AS SHOWN 1

FILE NAME:
MEX. DATES:
DATE PLOTTED:

WHITING TURNER CONTRACTING

I HAVE REVIEWED THESE DRAWINGS AND THEY ARE APPROVED FOR PRODUCTION. MY SIGNATURE BELOW CONFIRMS MY UNDERSTANDING AND ACCEPTANCE OF THE FOLLOWING CONDITIONS.

1. ANY CHANGES TO THESE DRAWINGS NOT INITIALED BY ME WILL BE IGNORED BY FCBP.
2. ANY CHANGES TO THESE DRAWINGS MAY RESULT IN A PRICE ADJUSTMENT.
3. ANY UNCORRECTED ERRORS CONTAINED IN THESE DRAWINGS ARE MY RESPONSIBILITY.
4. ANY CHANGES TO THESE DRAWINGS WHICH CREATE UNCORRECTED ERRORS ARE MY RESPONSIBILITY.
5. FCBP HAS CONTRACTED TO SUPPLY THE MATERIAL QUANTITIES PRINTED ON THESE DRAWINGS. ANY ADDITIONAL MATERIAL WILL BE BILLED SEPARATELY FROM THE ORIGINAL PURCHASE ORDER.

SIGNATURE DATE

THIS ORDER CANNOT BE RELEASED FOR PRODUCTION WITHOUT YOUR SIGNATURE!

C

B

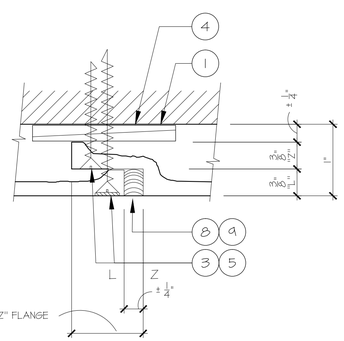

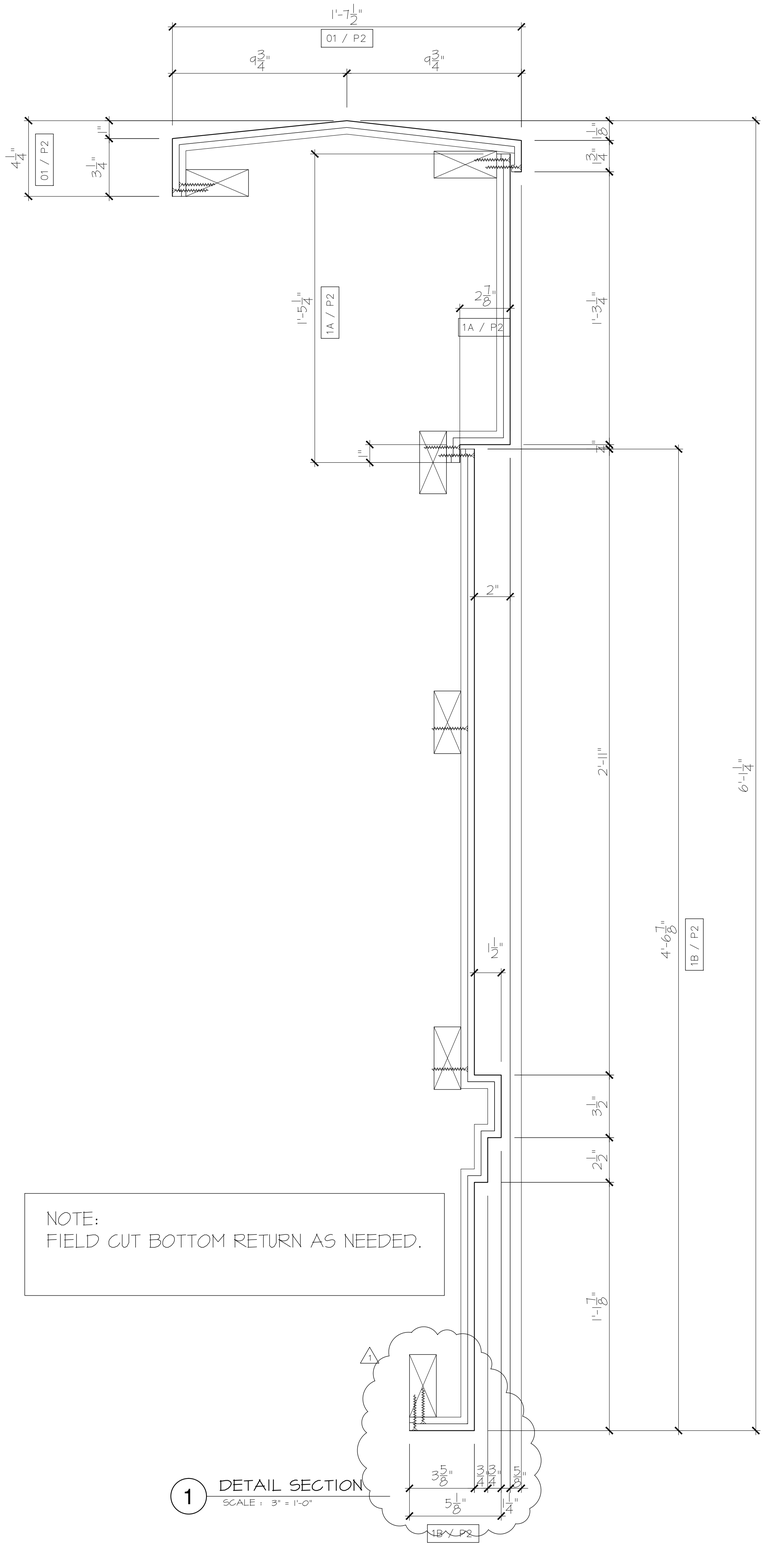

NOTE:
FIELD CUT BOTTOM RETURN AS NEEDED.

1 DETAIL SECTION
SCALE : 3" = 1'-0"

REQ'D.			
(30)	01 / P2	ECHO STONE CORNICE 4 1/4"H x 1'-7 1/2"D 9'-11 3/4" STRAIGHT LENGTH	Z/L
(30)	1A / P2	ECHO STONE CORNICE 1'-5 1/4"H x 2 7/8"D 9'-11 3/4" STRAIGHT LENGTH	Z/L
(30)	1B / P2	ECHO STONE CORNICE 4'-6 7/8"H x 5 1/8"D 9'-11 3/4" STRAIGHT LENGTH	Z/L
(10)	02 / P2	ECHO STONE CORNICE 4 1/4"H x 1'-7 1/2"D 7'-11 3/4" STRAIGHT LENGTH	Z/L
(10)	2A / P2	ECHO STONE CORNICE 1'-5 1/4"H x 2 7/8"D 7'-11 3/4" STRAIGHT LENGTH	Z/L
(10)	2B / P2	ECHO STONE CORNICE 4'-6 7/8"H x 5 1/8"D 7'-11 3/4" STRAIGHT LENGTH	Z/L
(6)	03 / P2	ECHO STONE CORNICE 4 1/4"H x 1'-7 1/2"D 3'-0" STRAIGHT LENGTH	Z/L
(6)	3A / P2	ECHO STONE CORNICE 1'-5 1/4"H x 2 7/8"D 3'-0" STRAIGHT LENGTH	Z/L
(6)	3B / P2	ECHO STONE CORNICE 4'-6 7/8"H x 5 1/8"D 3'-0" STRAIGHT LENGTH	Z/L
(2)	04 / P2	ECHO STONE CORNICE - 90° OSC 4 1/4"H x 1'-7 1/2"D 3'-7 3/4" x 3'-7 3/4" SQ.	Z/L
(2)	4A / P2	ECHO STONE CORNICE - 90° OSC 1'-5 1/4"H x 2 7/8"D 3'-7 1/8" x 3'-7 1/8" SQ.	Z/L
(2)	4B / P2	ECHO STONE CORNICE - 90° OSC 4'-6 7/8"H x 5 1/8"D 3'-6 5/8" x 3'-6 5/8" SQ.	Z/L
(8)	05 / P2	ECHO STONE CORNICE - 90° OSC 4 1/4"H x 1'-7 1/2"D 2'-11 1/2" x 2'-11 1/2" SQ.	Z/L
(8)	5A / P2	ECHO STONE CORNICE - 90° OSC 1'-5 1/4"H x 2 7/8"D 2'-10 7/8" x 2'-10 7/8" SQ.	Z/L
(8)	5B / P2	ECHO STONE CORNICE - 90° OSC 4'-6 7/8"H x 5 1/8"D 2'-10 3/8" x 2'-10 3/8" SQ.	Z/L
(2)	06 / P2	ECHO STONE CORNICE - 90° OSC 4 1/4"H x 1'-7 1/2"D 4'-3 1/2" x 4'-3 1/2" SQ.	Z/L
(2)	6A / P2	ECHO STONE CORNICE - 90° OSC 1'-5 1/4"H x 2 7/8"D 4'-2 7/8" x 4'-2 7/8" SQ.	Z/L
(2)	6B / P2	ECHO STONE CORNICE - 90° OSC 4'-6 7/8"H x 5 1/8"D 4'-2 3/8" x 4'-2 3/8" SQ.	Z/L
(2)	08 / P2	ECHO STONE CORNICE - 90° ISC 4 1/4"H x 1'-7 1/2"D 3'-11 1/2" x 3'-11 1/2" SQ.	Z/L
(2)	8A / P2	ECHO STONE CORNICE - 90° ISC 1'-5 1/4"H x 2 7/8"D 2'-7 1/2" x 2'-7 1/2" SQ.	Z/L
(2)	8B / P2	ECHO STONE CORNICE - 90° ISC 4'-6 7/8"H x 5 1/8"D 2'-10 1/4" x 2'-10 1/4" SQ.	Z/L
(2)	09 / P2	ECHO STONE CORNICE - 90° ISC 4 1/4"H x 1'-7 1/2"D 2'-0" x 2'-0" SQ.	Z/L
(2)	9A / P2	ECHO STONE CORNICE - 90° ISC 1'-5 1/4"H x 2 7/8"D 8" x 8" SQ.	Z/L
(2)	9B / P2	ECHO STONE CORNICE - 90° ISC 4'-6 7/8"H x 5 1/8"D 10 3/4" x 10 3/4" SQ.	Z/L

TOTAL: (186)

DETAIL SECTION | FULL | A | (B) | ECHO STONE CORNICE | AS SHOWN | 1

FIRST CLASS ARCHITECTURAL PRODUCTS
1-888-514-8141

FIRST CLASS
Building Products, Inc.
3600 DALLAS HIGHWAY
SUITE 230-387
MARIETTA GA 30064
WWW.FIRSTCLASSBP.COM

THESE PLANS AND THE DESIGNS CONTAINED THEREIN ARE THE SOLE PROPERTY *First Class Building Products* (HEREINAFTER DESIGNATED FCBP). THESE PLANS MAY NOT BE REPRODUCED OR USED WITHOUT WRITTEN PERMISSION OF DEC. UNAUTHORIZED USE SHALL INVITE A CLAIM FOR COMPENSATION BY FCBP. ALL FABRICATORS, CONTRACTORS INDICATED AND OTHERS UTILIZING THESE PLANS IN CONNECTION WITH THIS PROJECT ARE RESPONSIBLE FOR THEIR OWN MEASUREMENTS AND DIMENSIONS ON THE JOB. PLUMBING AND ELECTRICAL INFORMATION AND OUTLETS ARE FOR THE SOLE PURPOSE OF INDICATING THE REQUIREMENTS OF THE FIXTURES AND EQUIPMENT., STRUCTURAL FCBP ASSUMES NO RESPONSIBILITY FOR WORK DONE BY CONTRACTORS, NOR FOR ANY CHANGES MADE NECESSARY BY LOCAL BUILDING CODES, ORDINANCES CONDITIONS, OR SPECIFICATIONS. THE ARCHITECTURAL DRAWINGS, PLANS AND SPECIFICATIONS ARE PART OF THE CONTRACT DOCUMENTS. FABRICATORS, CONTRACTORS, AND ALL OTHER PERSONS UTILIZING THESE PLANS ARE ADVISED THAT THEY ARE RESPONSIBLE FOR EXAMINING AND BECOMING FAMILIAR WITH SAID GENERAL NOTES BEFORE COMMENCING ANY WORK DONE ON THIS PROJECT. ANY INCONSISTANCIES BETWEEN THESE PLANS, THE GENERAL NOTES, AND THE LOCAL BUILDING CODES, OR ORDINANCES, MUST IMMEDIATELY BE CALLED TO THE ATTENTION OF FCBP IN WRITING SO THAT ANY INCONSISTANCIES CAN BE RESOLVED. FCBP IS NOT RESPONSIBLE FOR ANY ARCHITECTURAL OR ENGINEERING DETAILS OR SPECIFICATIONS. THE USE BY ANY PERSON OR FIRM OF THESE PLANS OR ANY PART THEREOF SHALL NOT IN ANY WAY SUBJECT FCBP TO ANY COST OR DAMAGES FOR ANY ERROR OR OMISSION CONTAINED THEREIN.

No.	REVISION	DATE	BY
1	CLIENT UPDATE	3-10-11	DS

REVISIONS

RADFORD UNIVERSITY
RADFORD, VA
WHITING-TURNER CONTRACTING

SCALE	AS SHOWN
DRAWN BY	DS
DEC PROJ. MGR.	
APPROVED BY	
QUOTE NO.	13148-2
DATE	12-29-10

ECHO STONE CORNICE

SHEET No. P2

JOB NO. 10-2861

FILE NAME:
MEX. DATES:
DATE PLOTTED:

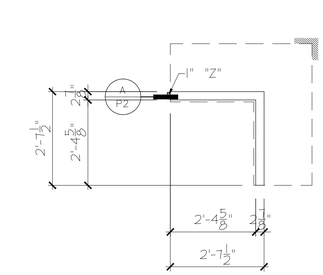

17 REFLECTIVE PLAN VIEW 8A / P2
SCALE : 1/2" = 1'-0"

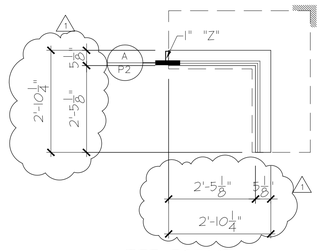

18 REFLECTIVE PLAN VIEW 8B / P2
SCALE : 1/2" = 1'-0"

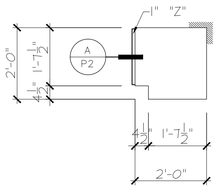

19 REFLECTIVE PLAN VIEW 09 / P2
SCALE : 1/2" = 1'-0"

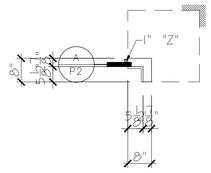

20 REFLECTIVE PLAN VIEW 9A / P2
SCALE : 1/2" = 1'-0"

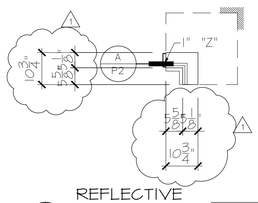

21 REFLECTIVE PLAN VIEW 9B / P2
SCALE : 1/2" = 1'-0"

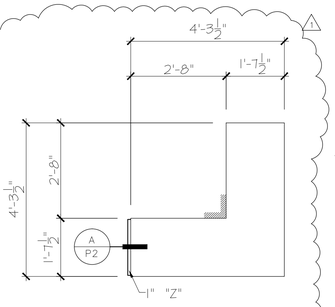

10 REFLECTIVE PLAN VIEW 06 / P2
SCALE : 1/2" = 1'-0"

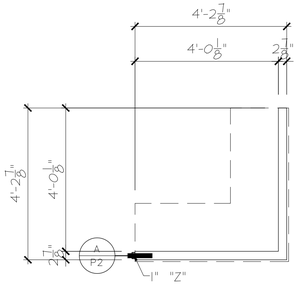

11 REFLECTIVE PLAN VIEW 6A / P2
SCALE : 1/2" = 1'-0"

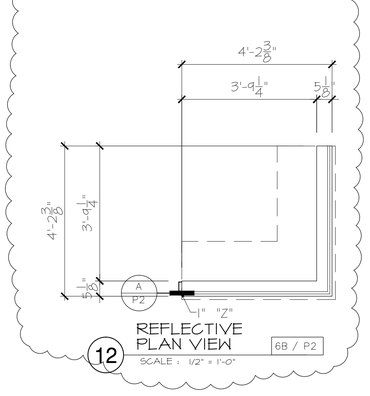

12 REFLECTIVE PLAN VIEW 6B / P2
SCALE : 1/2" = 1'-0"

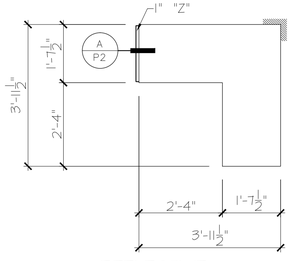

16 REFLECTIVE PLAN VIEW 08 / P2
SCALE : 1/2" = 1'-0"

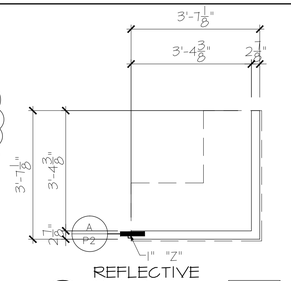

5 REFLECTIVE PLAN VIEW 4A / P2
SCALE : 1/2" = 1'-0"

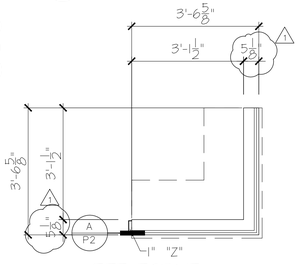

6 REFLECTIVE PLAN VIEW 4B / P2
SCALE : 1/2" = 1'-0"

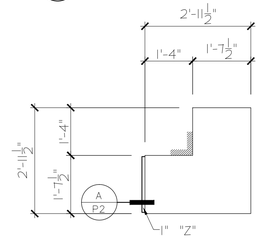

7 REFLECTIVE PLAN VIEW 05 / P2
SCALE : 1/2" = 1'-0"

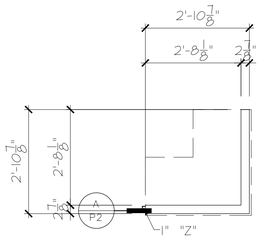

8 REFLECTIVE PLAN VIEW 5A / P2
SCALE : 1/2" = 1'-0"

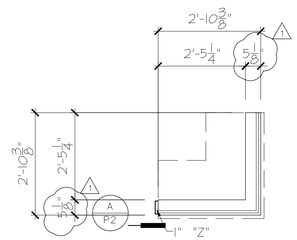

9 REFLECTIVE PLAN VIEW 5B / P2
SCALE : 1/2" = 1'-0"

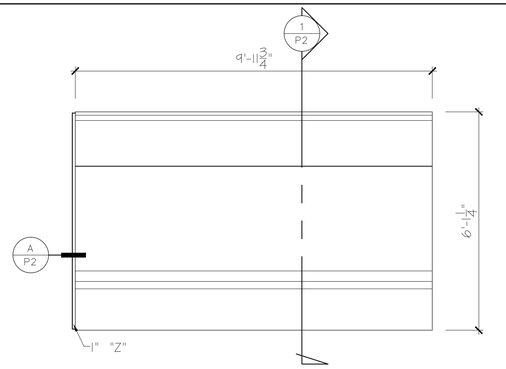

1 ELEVATION 01 / P2 | 1A / P2 | 1B / P2
SCALE : 1/2" = 1'-0"

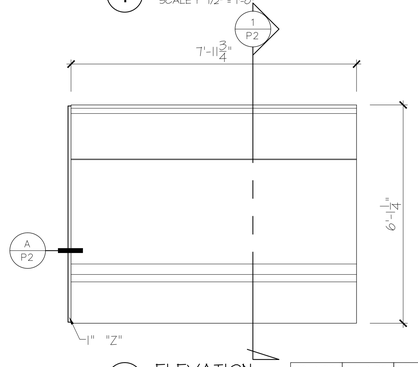

2 ELEVATION 02 / P2 | 2A / P2 | 2B / P2
SCALE : 1/2" = 1'-0"

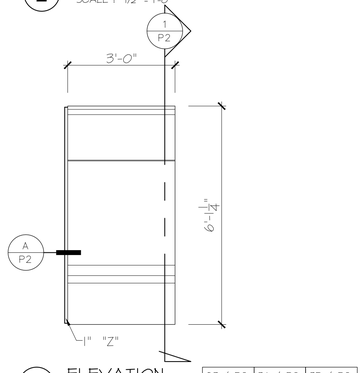

3 ELEVATION 03 / P2 | 3A / P2 | 3B / P2
SCALE : 1/2" = 1'-0"

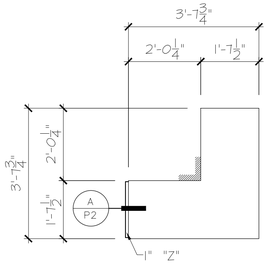

4 REFLECTIVE PLAN VIEW 04 / P2
SCALE : 1/2" = 1'-0"

WHITING TURNER CONTRACTING

I HAVE REVIEWED THESE DRAWINGS AND THEY ARE APPROVED FOR PRODUCTION. MY SIGNATURE BELOW CONFIRMS MY UNDERSTANDING AND ACCEPTANCE OF THE FOLLOWING CONDITIONS.

1. ANY CHANGES TO THESE DRAWINGS NOT INITIALED BY ME WILL BE IGNORED BY FCBP.
2. ANY CHANGES TO THESE DRAWINGS MAY RESULT IN A PRICE ADJUSTMENT.
3. ANY UNCORRECTED ERRORS CONTAINED IN THESE DRAWINGS ARE MY RESPONSIBILITY.
4. ANY CHANGES TO THESE DRAWINGS WHICH CREATE UNCORRECTED ERRORS ARE MY RESPONSIBILITY.
5. FCBP HAS CONTRACTED TO SUPPLY THE MATERIAL QUANTITIES PRINTED ON THESE DRAWINGS. ANY ADDITIONAL MATERIAL WILL BE BILLED SEPARATELY FROM THE ORIGINAL PURCHASE ORDER.

SIGNATURE DATE

THIS ORDER CANNOT BE RELEASED FOR PRODUCTION WITHOUT YOUR SIGNATURE!

FIRST CLASS ARCHITECTURAL PRODUCTS
1-888-514-8141

FIRST CLASS
Building Products, Inc.
3600 DALLAS HIGHWAY
SUITE 230-387
MARIETTA GA 30064
WWW.FIRSTCLASSBP.COM

THESE PLANS AND THE DESIGNS CONTAINED THEREIN ARE THE SOLE PROPERTY OF *First Class Building Products* (HEREINAFTER DESIGNATED FCBP). THESE PLANS MAY NOT BE REPRODUCED OR USED WITHOUT WRITTEN PERMISSION OF DEC. UNAUTHORIZED USE SHALL INVITE A CLAIM FOR COMPENSATION BY FCBP. ALL FABRICATORS, CONTRACTORS INDICATED AND OTHERS UTILIZING THESE PLANS IN CONNECTION WITH THIS PROJECT ARE RESPONSIBLE FOR THEIR OWN MEASUREMENTS AND DIMENSIONS ON THE JOB. PLUMBING AND ELECTRICAL INFORMATION AND OUTLETS ARE FOR THE SOLE PURPOSE OF INDICATING THE REQUIREMENTS OF THE FIXTURES AND EQUIPMENT. STRUCTURAL FCBP ASSUMES NO RESPONSIBILITY FOR WORK DONE BY CONTRACTORS, NOR FOR ANY CHANGES MADE NECESSARY BY LOCAL BUILDING CODES, ORDINANCES CONDITIONS, OR BY THE SUBSTITUTION OR CHANGES IN EQUIPMENT SHOWN ON THESE PLANS, AND REFERENCE IS MADE TO THE GENERAL NOTES WHICH ARE PART OF THESE PLANS, AND FAMILIARIZE YOURSELF WITH THE SAME. ANY DISCREPANCIES OR CONFLICTS BETWEEN THESE PLANS AND ANY OTHER PLANS WITH SAID GENERAL NOTES BEFORE COMMENCING ANY WORK DONE ON THIS PROJECT. ANY INCONSISTANCIES BETWEEN THESE PLANS, THE GENERAL NOTES, AND THE LOCAL BUILDING CODES, OR ORDINANCES, MUST IMMEDIATELY BE CALLED TO THE ATTENTION OF FCBP IN WRITING SO THAT ANY INCONSISTANCIES CAN BE RESOLVED. FCBP IS NOT RESPONSIBLE FOR ANY ARCHITECTURAL OR ENGINEERING DETAILS OR SPECIFICATIONS. THE USE BY ANY PERSON OR FIRM OF THESE PLANS OR ANY PART THEREOF SHALL NOT IN ANY WAY SUBJECT FCBP TO ANY COST OR DAMAGES FOR ANY ERROR OR OMISSION CONTAINED THEREIN.

No.	REVISION	DATE	BY
1	CLIENT UPDATE	3-10-11	DS

REVISIONS

RADFORD UNIVERSITY
RADFORD, VA
WHITING-TURNER CONTRACTING

SCALE	AS SHOWN
DRAWN BY	DS
DEC PROJ. MGR.	
APPROVED BY	
QUOTE NO.	13148-2
DATE	12-29-10

ECHO STONE CORNICE

SHEET No.
P2-CONT.
JOB NO. 10-2861

(B) ECHO STONE CORNICE AS SHOWN 1

FILE NAME:
MEX. DATES:
DATE PLOTTED:

WHITING TURNER CONTRACTING

I HAVE REVIEWED THESE DRAWINGS AND THEY ARE APPROVED FOR PRODUCTION. MY SIGNATURE BELOW CONFIRMS MY UNDERSTANDING AND ACCEPTANCE OF THE FOLLOWING CONDITIONS.

1. ANY CHANGES TO THESE DRAWINGS NOT INITIALED BY ME WILL BE IGNORED BY FCBP.
2. ANY CHANGES TO THESE DRAWINGS MAY RESULT IN A PRICE ADJUSTMENT.
3. ANY UNCORRECTED ERRORS CONTAINED IN THESE DRAWINGS ARE MY RESPONSIBILITY.
4. ANY CHANGES TO THESE DRAWINGS WHICH CREATE UNCORRECTED ERRORS ARE MY RESPONSIBILITY.
5. FCBP HAS CONTRACTED TO SUPPLY THE MATERIAL QUANTITIES PRINTED ON THESE DRAWINGS. ANY ADDITIONAL MATERIAL WILL BE BILLED SEPARATELY FROM THE ORIGINAL PURCHASE ORDER.

SIGNATURE DATE

THIS ORDER CANNOT BE RELEASED FOR PRODUCTION WITHOUT YOUR SIGNATURE!

C

B

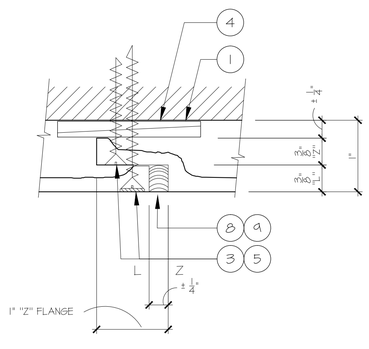

A

REQ'D. :

(18)	01 / P3	ECHO STONE CORNICE 4 1/4"H x 1'-6 5/8"D 8'-7 3/4" STRAIGHT LENGTH	Z/L
(18)	1A / P3	ECHO STONE CORNICE 11 7/8"H x 2 1/2"D 8'-7 3/4" STRAIGHT LENGTH	Z/L
(18)	1B / P3	ECHO STONE CORNICE 3'-6 1/8"H x 2 1/2"D 8'-7 3/4" STRAIGHT LENGTH	Z/L
(20)	02 / P3	ECHO STONE CORNICE 4 1/4"H x 1'-6 5/8"D 9'-11 3/4" STRAIGHT LENGTH	Z/L
(20)	2A / P3	ECHO STONE CORNICE 11 7/8"H x 2 1/2"D 9'-11 3/4" STRAIGHT LENGTH	Z/L
(20)	2B / P3	ECHO STONE CORNICE 3'-6 1/8"H x 2 1/2"D 9'-11 3/4" STRAIGHT LENGTH	Z/L
(17)	03 / P3	ECHO STONE CORNICE 4 1/4"H x 1'-6 5/8"D 9'-11 3/4" STRAIGHT LENGTH	Z/L
(17)	3A / P3	ECHO STONE CORNICE 11 7/8"H x 2 1/2"D 9'-11 3/4" STRAIGHT LENGTH	Z/L
(17)	3B / P3	ECHO STONE CORNICE 3'-6 1/8"H x 2 1/2"D 9'-11 3/4" STRAIGHT LENGTH	Z/L
(12)	04 / P3	ECHO STONE CORNICE 4 1/4"H x 1'-6 5/8"D 9'-11 3/4" STRAIGHT LENGTH	Z/L
(12)	4A / P3	ECHO STONE CORNICE 11 7/8"H x 2 1/2"D 9'-11 3/4" STRAIGHT LENGTH	Z/L
(12)	4B / P3	ECHO STONE CORNICE 3'-6 1/8"H x 2 1/2"D 9'-11 3/4" STRAIGHT LENGTH	Z/L
(2)	05 / P3	ECHO STONE CORNICE - 90° OSC 4 1/4"H x 1'-6 5/8"D 3'-0" x 3'-0" SQ.	Z/L
(2)	5A / P3	ECHO STONE CORNICE - 90° OSC 11 7/8"H x 2 1/2"D 2'-11 3/8" x 2'-11 3/8" SQ.	Z/L
(2)	5B / P3	ECHO STONE CORNICE - 90° OSC 3'-6 1/8"H x 2 1/2"D 2'-10 5/8" x 2'-10 5/8" SQ.	Z/L
(8)	06 / P3	ECHO STONE CORNICE - 90° OSC 4 1/4"H x 1'-6 5/8"D 2'-7" x 2'-7" SQ.	Z/L
(8)	6A / P3	ECHO STONE CORNICE - 90° OSC 11 7/8"H x 2 1/2"D 2'-6 3/8" x 2'-6 3/8" SQ.	Z/L
(8)	6B / P3	ECHO STONE CORNICE - 90° OSC 3'-6 1/8"H x 2 1/2"D 2'-5 5/8" x 2'-5 5/8" SQ.	Z/L
(2)	07 / P3	ECHO STONE CORNICE - 90° ISC 4 1/4"H x 1'-6 5/8"D 3'-7 5/8" x 3'-7 5/8" SQ.	Z/L
(2)	7A / P3	ECHO STONE CORNICE - 90° ISC 11 7/8"H x 2 1/2"D 2'-4 1/8" x 2'-4 1/8" SQ.	Z/L
(2)	7B / P3	ECHO STONE CORNICE - 90° ISC 3'-6 1/8"H x 2 1/2"D 2'-4 7/8" x 2'-4 7/8" SQ.	Z/L
(1)	08 / P3	ECHO STONE CORNICE - 90° ISC 4 1/4"H x 1'-6 5/8"D 3'-6 1/2" x 3'-6 1/2" SQ.	Z/L
(1)	8A / P3	ECHO STONE CORNICE - 90° ISC 11 7/8"H x 2 1/2"D 2'-3" x 2'-3" SQ.	Z/L
(1)	8B / P3	ECHO STONE CORNICE - 90° ISC 3'-6 1/8"H x 2 1/2"D 2'-3 3/4" x 2'-3 3/4" SQ.	Z/L
(1)	09 / P3	ECHO STONE CORNICE - 90° ISC 4 1/4"H x 1'-6 5/8"D 2'-3 3/8" x 2'-3 3/8" SQ.	Z/L
(1)	9A / P3	ECHO STONE CORNICE - 90° ISC 11 7/8"H x 2 1/2"D 11 7/8" x 11 7/8" SQ.	Z/L
(1)	9B / P3	ECHO STONE CORNICE - 90° ISC 3'-6 1/8"H x 2 1/2"D 1'-0 5/8" x 1'-0 5/8" SQ.	Z/L
(2)	10 / P3	ECHO STONE CORNICE - 128° OSC 4 1/4"H x 1'-6 5/8"D 2'-9 1/4" x 2'-9 1/4"	Z/L
(2)	10A / P3	ECHO STONE CORNICE - 128° OSC 11 7/8"H x 2 1/2"D 2'-9" x 2'-9"	Z/L
(2)	10B / P3	ECHO STONE CORNICE - 128° OSC 3'-6 1/8"H x 2 1/2"D 2'-8 5/8" x 2'-8 5/8"	Z/L
(2)	11 / P3	ECHO STONE CORNICE - 128° ISC 4 1/4"H x 1'-6 5/8"D 2'-9 1/4" x 2'-9 1/4"	Z/L
(2)	11A / P3	ECHO STONE CORNICE - 128° ISC 11 7/8"H x 2 1/2"D 2'-1 3/4" x 2'-1 3/4"	Z/L
(2)	11B / P3	ECHO STONE CORNICE - 128° ISC 3'-6 1/8"H x 2 1/2"D 2'-2" x 2'-2"	Z/L

TOTAL: (255)

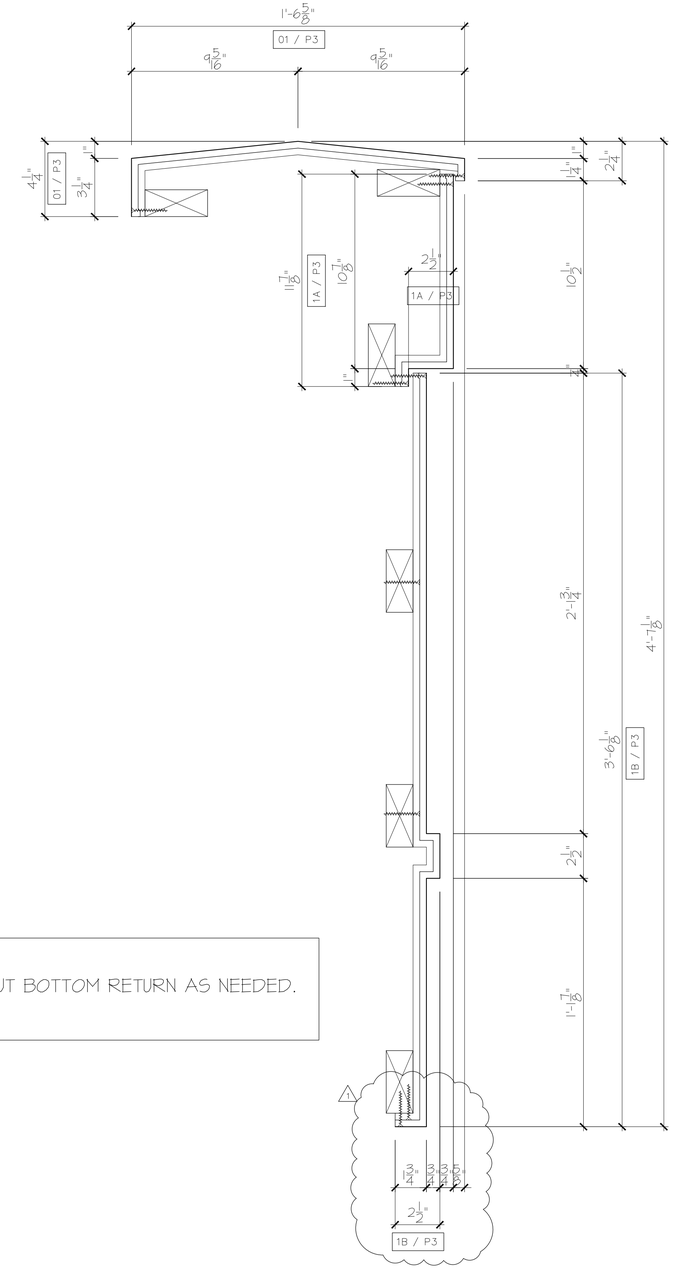

NOTE:
FIELD CUT BOTTOM RETURN AS NEEDED.

1 DETAIL SECTION
SCALE : 3" = 1'-0"

FIRST CLASS ARCHITECTURAL PRODUCTS
1-888-514-8141

FIRST CLASS
Building Products, Inc.
3600 DALLAS HIGHWAY
SUITE 230-387
MARIETTA GA 30064
WWW.FIRSTCLASSBP.COM

THESE PLANS AND THE DESIGNS CONTAINED THEREIN ARE THE SOLE PROPERTY First Class Building Products (HEREINAFTER DESIGNATED FCBP). THESE PLANS MAY NOT BE REPRODUCED OR USED WITHOUT WRITTEN PERMISSION OF FCC. UNAUTHORIZED USE SHALL INVITE A CLAIM FOR COMPENSATION BY FCBP. ALL FABRICATORS, CONTRACTORS INDICATED AND OTHERS UTILIZING THESE PLANS IN CONNECTION WITH THIS PROJECT ARE RESPONSIBLE FOR THEIR OWN MEASUREMENTS AND DIMENSIONS ON THE JOB. PLUMBING AND ELECTRICAL INFORMATION AND OUTLETS ARE FOR THE SOLE PURPOSE OF INDICATING THE REQUIREMENTS OF THE FIXTURES AND EQUIPMENT. STRUCTURAL FCBP ASSUMES NO RESPONSIBILITY FOR WORK DONE BY CONTRACTORS, NOR FOR ANY CHANGES MADE NECESSARY BY LOCAL BUILDING CODES, ORDINANCES, CONDITIONS, FOR ANY CHANGES MADE WITHOUT OUR CONSENT. WE ASSUME THAT THESE PLANS ARE AT LEAST THE BEST CLASS, AND FABRICATORS, CONTRACTORS, AND ALL OTHER PERSONS UTILIZING THESE PLANS ARE ADVISED THAT THEY ARE RESPONSIBLE FOR EXAMINING AND BECOMING FAMILIAR WITH SAID GENERAL NOTES BEFORE COMMENCING ANY WORK DONE ON THIS PROJECT. ANY INCONSISTANCIES BETWEEN THESE PLANS, THE GENERAL NOTES, AND THE LOCAL BUILDING CODES, OR ORDINANCES, MUST IMMEDIATELY BE CALLED TO THE ATTENTION OF FCBP IN WRITING SO THAT ANY INCONSISTANCIES CAN BE RESOLVED. FCBP IS NOT RESPONSIBLE FOR ANY ARCHITECTURAL OR ENGINEERING DETAILS OR SPECIFICATIONS. THE USE BY ANY PERSON OR FIRM OF THESE PLANS OR ANY PART THEREOF SHALL NOT IN ANY WAY SUBJECT FCBP TO ANY COST OR DAMAGES FOR ANY ERROR OR OMISSION CONTAINED THEREIN.

No.	REVISION	DATE	BY
1	CLIENT UPDATE	3-10-11	DS

REVISIONS

RADFORD UNIVERSITY
RADFORD, VA
WHITING-TURNER CONTRACTING

SCALE	AS SHOWN
DRAWN BY	DS
DEC PROJ. MGR.	
APPROVED BY	
QUOTE NO.	13148-2
DATE	12-29-10

ECHO STONE CORNICE

SHEET No. P3

JOB NO. 10-2861

DETAIL SECTION | FULL | A | (C) | ECHO STONE CORNICE | AS SHOWN | 1

FILE NAME:
MEX. DATES:
DATE PLOTTED:

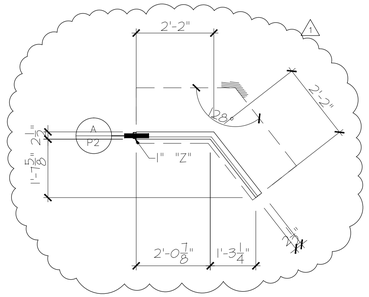

25 REFLECTIVE PLAN VIEW — 11B / P3
SCALE : 1/2" = 1'-0"

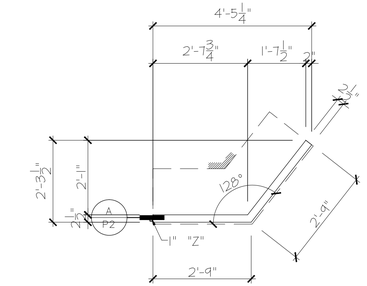

21 REFLECTIVE PLAN VIEW — 10A / P3
SCALE : 1/2" = 1'-0"

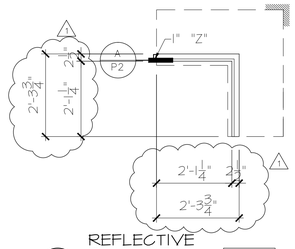

16 REFLECTIVE PLAN VIEW — 8B / P3
SCALE : 1/2" = 1'-0"

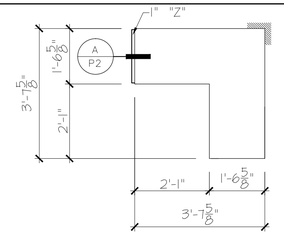

11 REFLECTIVE PLAN VIEW — 07 / P3
SCALE : 1/2" = 1'-0"

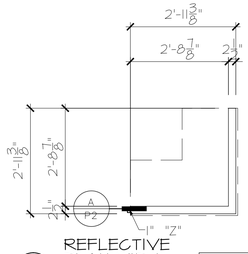

6 REFLECTIVE PLAN VIEW — 5A / P3
SCALE : 1/2" = 1'-0"

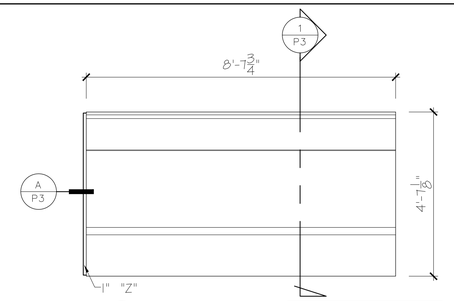

1 ELEVATION — 01 / P3 | 1A / P3 | 1B / P3
SCALE : 1/2" = 1'-0"

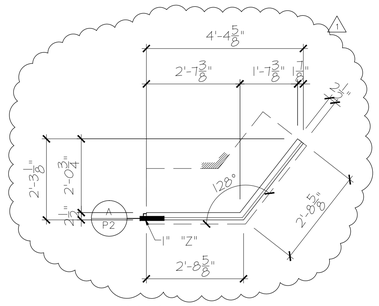

22 REFLECTIVE PLAN VIEW — 10B / P3
SCALE : 1/2" = 1'-0"

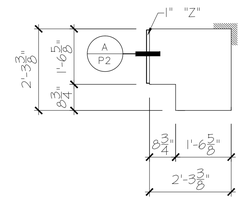

17 REFLECTIVE PLAN VIEW — 09 / P3
SCALE : 1/2" = 1'-0"

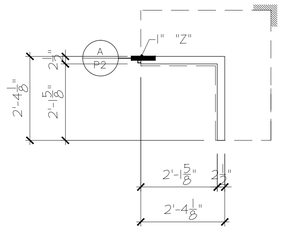

12 REFLECTIVE PLAN VIEW — 7A / P3
SCALE : 1/2" = 1'-0"

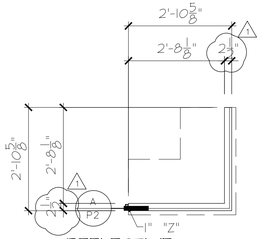

7 REFLECTIVE PLAN VIEW — 5B / P3
SCALE : 1/2" = 1'-0"

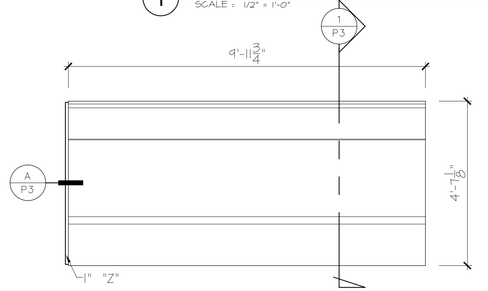

2 ELEVATION — 02 / P3 | 2A / P3 | 2B / P3
SCALE : 1/2" = 1'-0"

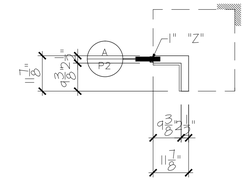

18 REFLECTIVE PLAN VIEW — 9A / P3
SCALE : 1/2" = 1'-0"

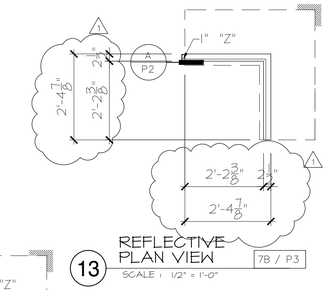

13 REFLECTIVE PLAN VIEW — 7B / P3
SCALE : 1/2" = 1'-0"

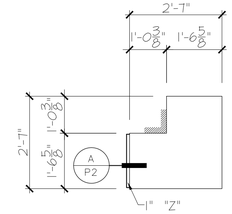

8 REFLECTIVE PLAN VIEW — 06 / P3
SCALE : 1/2" = 1'-0"

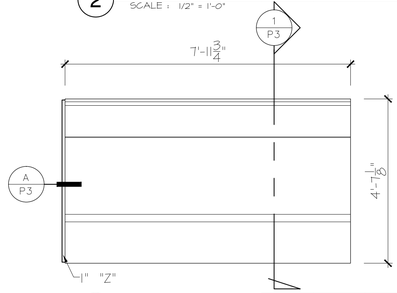

3 ELEVATION — 03 / P3 | 3A / P3 | 3B / P3
SCALE : 1/2" = 1'-0"

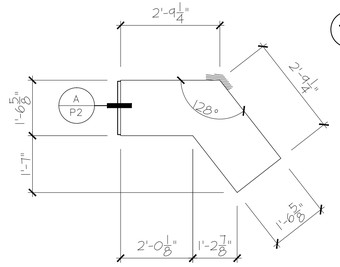

23 REFLECTIVE PLAN VIEW — 11 / P3
SCALE : 1/2" = 1'-0"

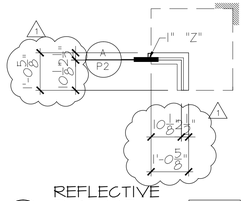

19 REFLECTIVE PLAN VIEW — 9B / P3
SCALE : 1/2" = 1'-0"

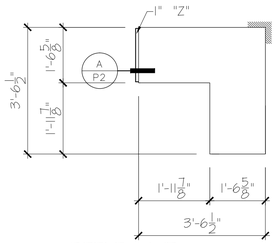

14 REFLECTIVE PLAN VIEW — 08 / P3
SCALE : 1/2" = 1'-0"

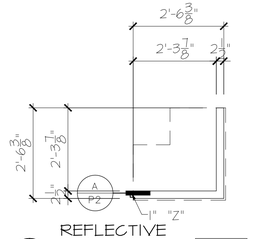

9 REFLECTIVE PLAN VIEW — 6A / P3
SCALE : 1/2" = 1'-0"

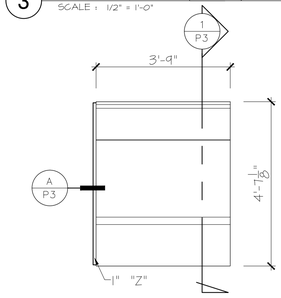

4 ELEVATION — 04 / P3 | 4A / P3 | 4B / P3
SCALE : 1/2" = 1'-0"

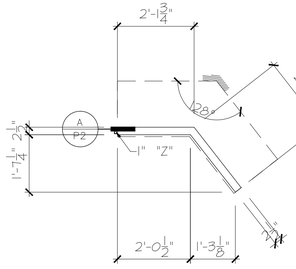

24 REFLECTIVE PLAN VIEW — 11A / P3
SCALE : 1/2" = 1'-0"

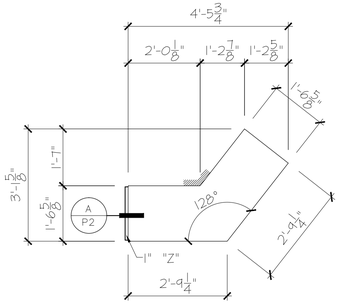

20 REFLECTIVE PLAN VIEW — 10 / P3
SCALE : 1/2" = 1'-0"

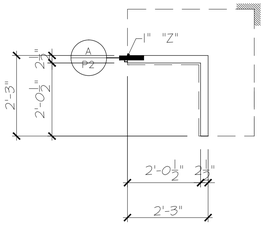

15 REFLECTIVE PLAN VIEW — 8A / P3
SCALE : 1/2" = 1'-0"

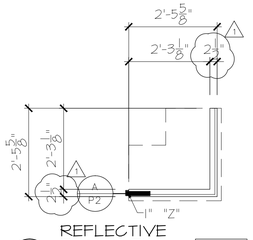

10 REFLECTIVE PLAN VIEW — 6B / P3
SCALE : 1/2" = 1'-0"

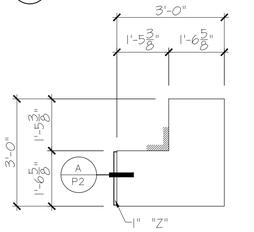

5 REFLECTIVE PLAN VIEW — 05 / P3
SCALE : 1/2" = 1'-0"

WHITING TURNER CONTRACTING

I HAVE REVIEWED THESE DRAWINGS AND THEY ARE APPROVED FOR PRODUCTION. MY SIGNATURE BELOW CONFIRMS MY UNDERSTANDING AND ACCEPTANCE OF THE FOLLOWING CONDITIONS.

1. ANY CHANGES TO THESE DRAWINGS NOT INITIALED BY ME WILL BE IGNORED BY FCBP.
2. ANY CHANGES TO THESE DRAWINGS MAY RESULT IN A PRICE ADJUSTMENT.
3. ANY UNCORRECTED ERRORS CONTAINED IN THESE DRAWINGS ARE MY RESPONSIBILITY.
4. ANY CHANGES TO THESE DRAWINGS WHICH CREATE UNCORRECTED ERRORS ARE MY RESPONSIBILITY.
5. FCBP HAS CONTRACTED TO SUPPLY THE MATERIAL QUANTITIES PRINTED ON THESE DRAWINGS. ANY ADDITIONAL MATERIAL WILL BE BILLED SEPARATELY FROM THE ORIGINAL PURCHASE ORDER.

SIGNATURE DATE

THIS ORDER CANNOT BE RELEASED FOR PRODUCTION WITHOUT YOUR SIGNATURE!

FIRST CLASS ARCHITECTURAL PRODUCTS
1-888-514-8141

FIRST CLASS
Building Products, Inc.
3600 DALLAS HIGHWAY
SUITE 230-387
MARIETTA GA 30064
WWW.FIRSTCLASSBP.COM

THESE PLANS AND THE DESIGNS CONTAINED THEREIN ARE THE SOLE PROPERTY First Class Building Products (HEREINAFTER DESIGNATED FCBP). THESE PLANS MAY NOT BE REPRODUCED OR USED WITHOUT WRITTEN PERMISSION OF DEC. UNAUTHORIZED USE SHALL INVITE A CLAIM FOR COMPENSATION BY FCBP. ALL FABRICATORS, CONTRACTORS INDICATED AND OTHERS UTILIZING THESE PLANS IN CONNECTION WITH THIS PROJECT ARE RESPONSIBLE FOR THEIR OWN MEASUREMENTS AND DIMENSIONS ON THE JOB. PLUMBING AND ELECTRICAL INFORMATION AND OUTLETS ARE FOR THE SOLE PURPOSE OF INDICATING THE REQUIREMENTS OF THE FIXTURES AND EQUIPMENT., STRUCTURAL FCBP ASSUMES NO RESPONSIBILITY FOR WORK DONE BY CONTRACTORS, NOR FOR ANY CHANGES MADE NECESSARY BY LOCAL BUILDING CODES, ORDINANCES CONDITIONS, OR BY ANY OTHER CAUSE. THESE PLANS ARE ADVISED THAT THEY ARE RESPONSIBLE FOR EXAMINING AND BECOMING FAMILIAR WITH SAID GENERAL NOTES BEFORE COMMENCING ANY WORK DONE ON THIS PROJECT. ANY INCONSISTANCIES BETWEEN THESE PLANS, THE GENERAL NOTES, AND THE LOCAL BUILDING CODES, OR ORDINANCES, MUST IMMEDIATELY BE CALLED TO THE ATTENTION OF FCBP IN WRITING SO THAT ANY INCONSISTANCIES CAN BE RESOLVED. FCBP IS NOT RESPONSIBLE FOR ANY ARCHITECTURAL OR ENGINEERING DETAILS OR SPECIFICATIONS. THE USE BY ANY PERSON OR FIRM OF THESE PLANS OR ANY PART THEREOF SHALL NOT IN ANY WAY SUBJECT FCBP TO ANY COST OR DAMAGES FOR ANY ERROR OR OMISSION CONTAINED THEREIN.

No.	REVISION	DATE	BY
1	CLIENT UPDATE	3-10-11	DS

REVISIONS

RADFORD UNIVERSITY
RADFORD, VA
WHITING-TURNER CONTRACTING

SCALE	AS SHOWN
DRAWN BY	DS
DEC PROJ. MGR.	
APPROVED BY	
QUOTE NO.	13148-2
DATE	12-29-10

ECHO STONE CORNICE

SHEET No.
P3-CONT.
JOB NO. 10-2861

(C) ECHO STONE CORNICE AS SHOWN 1

FILE NAME:
MEX. DATES:
DATE PLOTTED:

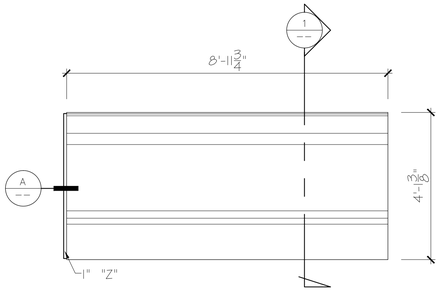

3 ELEVATION
SCALE : 1/2" = 1'-0"
03 / P4
3A / P4

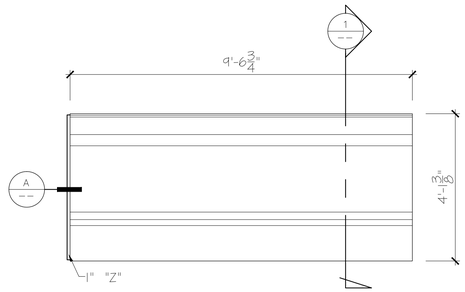

2 ELEVATION
SCALE : 1/2" = 1'-0"
01 / P4
1A / P4

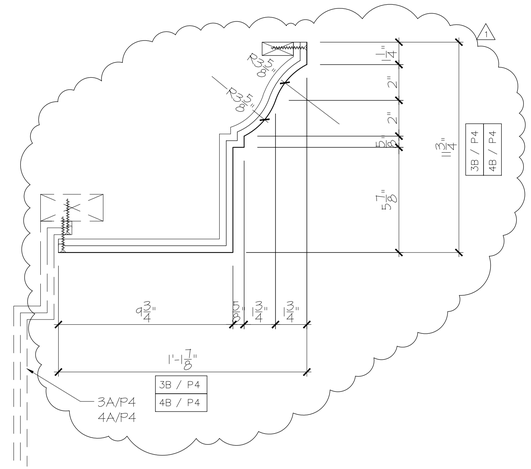

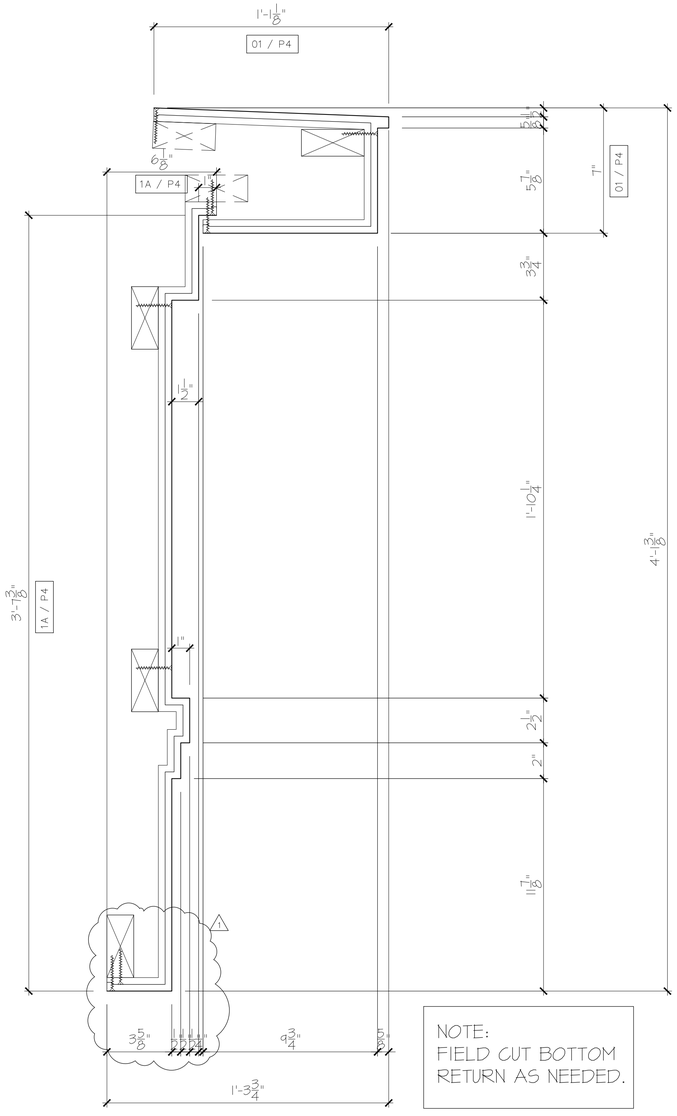

NOTE:
FIELD CUT BOTTOM
RETURN AS NEEDED.

1 DETAIL SECTION
SCALE : 3" = 1'-0"

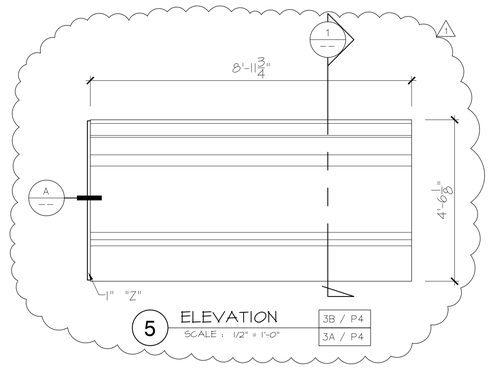

5 ELEVATION
SCALE : 1/2" = 1'-0"
3B / P4
3A / P4

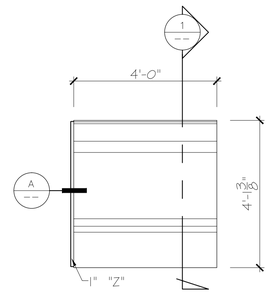

4 ELEVATION
SCALE : 1/2" = 1'-0"
04 / P4
4A / P4

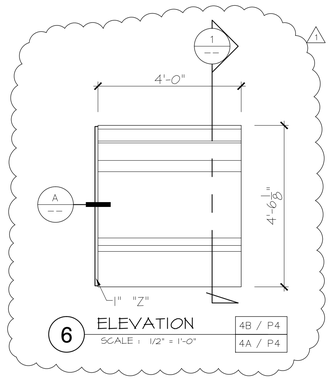

6 ELEVATION
SCALE : 1/2" = 1'-0"
4B / P4
4A / P4

WHITING TURNER CONTRACTING

I HAVE REVIEWED THESE DRAWINGS AND THEY ARE APPROVED FOR PRODUCTION. MY SIGNATURE BELOW CONFIRMS MY UNDERSTANDING AND ACCEPTANCE OF THE FOLLOWING CONDITIONS.

1. ANY CHANGES TO THESE DRAWINGS NOT INITIALED BY ME WILL BE IGNORED BY FCBP.
2. ANY CHANGES TO THESE DRAWINGS MAY RESULT IN A PRICE ADJUSTMENT.
3. ANY UNCORRECTED ERRORS CONTAINED IN THESE DRAWINGS ARE MY RESPONSIBILITY.
4. ANY CHANGES TO THESE DRAWINGS WHICH CREATE UNCORRECTED ERRORS ARE MY RESPONSIBILITY.
5. FCBP HAS CONTRACTED TO SUPPLY THE MATERIAL QUANTITIES PRINTED ON THESE DRAWINGS. ANY ADDITIONAL MATERIAL WILL BE BILLED SEPARATELY FROM THE ORIGINAL PURCHASE ORDER.

SIGNATURE DATE

THIS ORDER CANNOT BE RELEASED FOR PRODUCTION WITHOUT YOUR SIGNATURE!

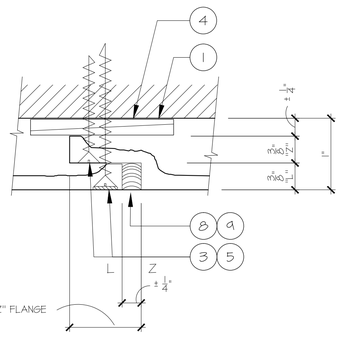

REQ'D. :

(8)	01 / P4	ECHO STONE CORNICE 7"H x 1'-1 1/8"D 9'-6 3/4" STRAIGHT LENGTH	Z/L
(8)	1A / P4	ECHO STONE CORNICE 3'-7 3/8"H x 6 1/8"D 9'-6 3/4" STRAIGHT LENGTH	Z/L
(8)	03 / P4	ECHO STONE CORNICE 7"H x 1'-1 1/8"D 8'-11 3/4" STRAIGHT LENGTH	Z/L
(10)	3A / P4	ECHO STONE CORNICE 3'-7 3/8"H x 6 1/8"D 8'-11 3/4" STRAIGHT LENGTH	Z/L
(2)	3B / P4	ECHO STONE CORNICE 11 3/4"H x 1'-1 7/8"D 8'-11 3/4" STRAIGHT LENGTH	Z/L
(8)	04 / P4	ECHO STONE CORNICE 7"H x 1'-1 1/8"D 4'-0" STRAIGHT LENGTH	Z/L
(14)	4A / P4	ECHO STONE CORNICE 3'-7 3/8"H x 6 1/8"D 4'-0" STRAIGHT LENGTH	Z/L
(6)	4B / P4	ECHO STONE CORNICE 11 3/4"H x 1'-1 7/8"D 4'-0" STRAIGHT LENGTH	Z/L

TOTAL: (64)

FIRST CLASS ARCHITECTURAL PRODUCTS
1-888-514-8141

FIRST CLASS
Building Products, Inc.
3600 DALLAS HIGHWAY
SUITE 230-387
MARIETTA GA 30064
WWW.FIRSTCLASSBP.COM

THESE PLANS AND THE DESIGNS CONTAINED THEREIN ARE THE SOLE PROPERTY First Class Building Products (HEREINAFTER DESIGNATED FCBP). THESE PLANS MAY NOT BE REPRODUCED OR USED WITHOUT WRITTEN PERMISSION OF DEC. UNAUTHORIZED USE SHALL INVITE A CLAIM FOR COMPENSATION BY FCBP. ALL FABRICATORS, CONTRACTORS INDICATED AND OTHERS UTILIZING THESE PLANS IN CONNECTION WITH THIS PROJECT ARE RESPONSIBLE FOR THEIR OWN MEASUREMENTS AND DIMENSIONS ON THE JOB. PLUMBING AND ELECTRICAL INFORMATION AND OUTLETS ARE FOR THE SOLE PURPOSE OF INDICATING THE REQUIREMENTS OF THE FIXTURES AND EQUIPMENT. STRUCTURAL FCBP ASSUMES NO RESPONSIBILITY FOR WORK DONE BY CONTRACTORS, NOR FOR ANY CHANGES MADE NECESSARY BY LOCAL BUILDING CODES, ORDINANCES CONDITIONS, OR BY THE SUBSTITUTION OR CHANGES IN EQUIPMENT SHOWN ON THESE PLANS. REFERENCE IS MADE TO THE GENERAL NOTES WHICH ARE PART OF THESE PLANS, AND FABRICATORS, CONTRACTORS, AND ALL OTHER PERSONS UTILIZING THESE PLANS ARE ADVISED THAT THEY ARE RESPONSIBLE FOR EXAMINING AND BECOMING FAMILIAR WITH ALL GENERAL NOTES. SPECIFICATIONS, AND ANY OTHER DOCUMENTS, THAT MAY AFFECT THEIR WORK. ANY DEVIATIONS FROM THESE PLANS ARE ADVISED THAT THEY ARE REQUIRED TO COMPLY WITH ALL LOCAL BUILDING CODES, OR ORDINANCES, MUST IMMEDIATELY BE CALLED TO THE ATTENTION OF FCBP IN WRITING SO THAT ANY INCONSISTANCES CAN BE RESOLVED. FCBP IS NOT RESPONSIBLE FOR ANY ARCHITECTURAL OR ENGINEERING DETAILS OR SPECIFICATIONS. THE USE BY ANY PERSON OR FIRM OF THESE PLANS OR ANY PART THEREOF SHALL NOT IN ANY WAY SUBJECT FCBP TO ANY COST OR DAMAGES THEREIN.

No.	REVISION	DATE	BY
1	CLIENT UPDATE	3-10-11	DS

REVISIONS

RADFORD UNIVERSITY
RADFORD, VA
WHITING-TURNER CONTRACTING

SCALE	AS SHOWN
DRAWN BY	DS
DEC PROJ. MGR.	
APPROVED BY	
QUOTE NO.	13148-2
DATE	12-29-10

ECHO STONE CORNICE

SHEET No. P4
JOB NO. 10-2861

DETAIL SECTION | FULL | A | (D) | ECHO STONE CORNICE | AS SHOWN | 1

BORDER EDITION - JANUARY 2004 BY: JAH
FILE NAME:
MEX. DATES:
DATE PLOTTED:

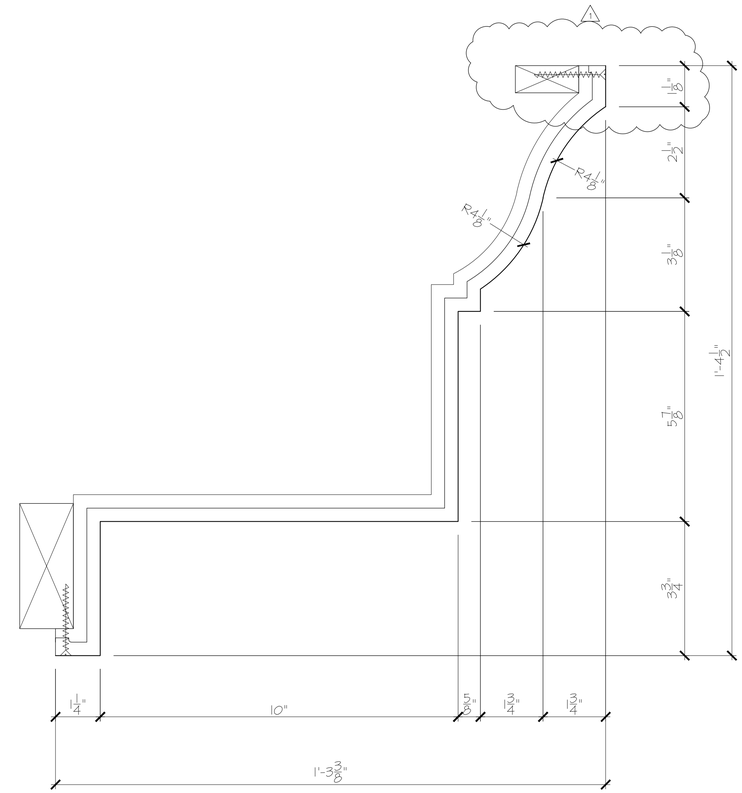

1 DETAIL SECTION
SCALE : 6" = 1'-0"

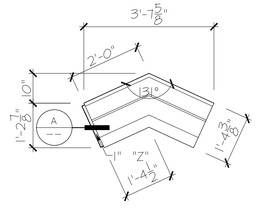

10 ELEVATION 04 / P5
SCALE : 1/2" = 1'-0"

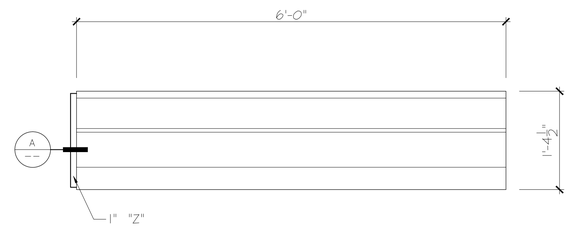

9 ELEVATION 03 / P5
SCALE : 1" = 1'-0"

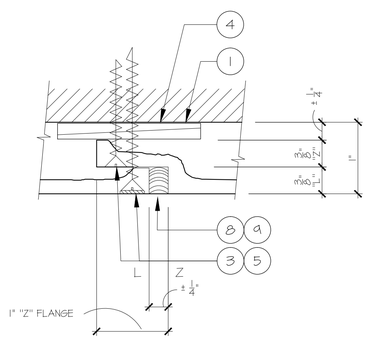

WHITING TURNER CONTRACTING

I HAVE REVIEWED THESE DRAWINGS AND THEY ARE APPROVED FOR PRODUCTION. MY SIGNATURE BELOW CONFIRMS MY UNDERSTANDING AND ACCEPTANCE OF THE FOLLOWING CONDITIONS.

1. ANY CHANGES TO THESE DRAWINGS NOT INITIALED BY ME WILL BE IGNORED BY FCBP.
2. ANY CHANGES TO THESE DRAWINGS MAY RESULT IN A PRICE ADJUSTMENT.
3. ANY UNCORRECTED ERRORS CONTAINED IN THESE DRAWINGS ARE MY RESPONSIBILITY.
4. ANY CHANGES TO THESE DRAWINGS WHICH CREATE UNCORRECTED ERRORS ARE MY RESPONSIBILITY.
5. FCBP HAS CONTRACTED TO SUPPLY THE MATERIAL QUANTITIES PRINTED ON THESE DRAWINGS. ANY ADDITIONAL MATERIAL WILL BE BILLED SEPARATELY FROM THE ORIGINAL PURCHASE ORDER.

SIGNATURE DATE

THIS ORDER CANNOT BE RELEASED FOR PRODUCTION WITHOUT YOUR SIGNATURE!

REQ'D. :(32) 03 / P5 ECHO STONE CORNICE
1'-4 1/2"H x 1'-3 3/8"D Z/L
6'-0" STRAIGHT LENGTH

(4) 04 / P5 ECHO STONE CORNICE - PEAK CORNER
1'-4 1/2"H x 1'-3 3/8"D Z/L
2'-0" x 2'-0"

TOTAL: (36)

FIRST CLASS
ARCHITECTURAL PRODUCTS
1-888-514-8141

FIRST CLASS
Building Products, Inc.
3600 DALLAS HIGHWAY
SUITE 230-387
MARIETTA GA 30064
WWW.FIRSTCLASSBP.COM

THESE PLANS AND THE DESIGNS CONTAINED THEREIN ARE THE SOLE PROPERTY *First Class Building Products* (HEREINAFTER DESIGNATED FCBP). THESE PLANS MAY NOT BE REPRODUCED OR USED WITHOUT WRITTEN PERMISSION OF DEC. UNAUTHORIZED USE SHALL INVITE A CLAIM FOR COMPENSATION BY FCBP. ALL FABRICATORS, CONTRACTORS INDICATED AND OTHERS UTILIZING THESE PLANS IN CONNECTION WITH THIS PROJECT ARE RESPONSIBLE FOR THEIR OWN MEASUREMENTS AND DIMENSIONS ON THE JOB. PLUMBING AND ELECTRICAL INFORMATION AND OUTLETS ARE FOR THE SOLE PURPOSE OF INDICATING THE REQUIREMENTS OF THE FIXTURES AND EQUIPMENT. STRUCTURAL FCBP ASSUMES NO RESPONSIBILITY FOR WORK DONE BY CONTRACTORS, NOR FOR ANY CHANGES MADE NECESSARY BY LOCAL BUILDING CODES, ORDINANCES CONDITIONS, OR BY THE SUBSTITUTION OR CHANGES IN EQUIPMENT SHOWN ON THESE PLANS. REFERENCE IS MADE TO THE GENERAL NOTES WHICH ARE PART OF THESE PLANS, AND FAILURE OF CONTRACTORS AND ALL OTHERS TO FOLLOW THESE NOTES MAY RESULT IN DELAYS, DAMAGES AND CHANGE ORDERS. ANY WORK DONE ON THIS PROJECT, ANY INCONSISTANCIES BETWEEN THESE PLANS, THE GENERAL NOTES, AND THE WITH SAID GENERAL NOTES BEFORE COMMENCING ANY WORK CONTEMPLATED HEREIN, MUST IMMEDIATELY BE CALLED TO THE ATTENTION OF FCBP IN WRITING SO THAT ANY INCONSISTANCIES CAN BE RESOLVED. LOCAL BUILDING CODES, OR ORDINANCES, MUST IMMEDIATELY BE CALLED TO THE ATTENTION OF FCBP IN WRITING SO THAT ANY INCONSISTANCIES CAN BE RESOLVED. FCBP IS NOT RESPONSIBLE FOR ANY ARCHITECTURAL OR ENGINEERING DETAILS OR SPECIFICATIONS. THE USE BY ANY PERSON OR FIRM OF THESE PLANS OR ANY PART THEREOF SHALL NOT IN ANY WAY SUBJECT FCBP TO ANY COST OR DAMAGES FOR ANY ERROR OR OMISSION CONTAINED THEREIN.

No.	REVISION	DATE	BY
1	CLIENT UPDATE	3-10-11	DS

REVISIONS

RADFORD UNIVERSITY
RADFORD, VA
WHITING-TURNER CONTRACTING

SCALE	AS SHOWN
DRAWN BY	DS
DEC PROJ. MGR.	
APPROVED BY	
QUOTE NO.	13148-2
DATE	12-29-10

ECHO STONE CORNICE

SHEET No. P5
JOB NO. 10-2861

DETAIL SECTION | FULL | A | (E) | ECHO STONE CORNICE | AS SHOWN | 1

FILE NAME:
MEX. DATES:
DATE PLOTTED:

WHITING TURNER CONTRACTING

I HAVE REVIEWED THESE DRAWINGS AND THEY ARE APPROVED FOR PRODUCTION. MY SIGNATURE BELOW CONFIRMS MY UNDERSTANDING AND ACCEPTANCE OF THE FOLLOWING CONDITIONS.

1. ANY CHANGES TO THESE DRAWINGS NOT INITIALED BY ME WILL BE IGNORED BY FCBP.
2. ANY CHANGES TO THESE DRAWINGS MAY RESULT IN A PRICE ADJUSTMENT.
3. ANY UNCORRECTED ERRORS CONTAINED IN THESE DRAWINGS ARE MY RESPONSIBILITY.
4. ANY CHANGES TO THESE DRAWINGS WHICH CREATE UNCORRECTED ERRORS ARE MY RESPONSIBILITY.
5. FCBP HAS CONTRACTED TO SUPPLY THE MATERIAL QUANTITIES PRINTED ON THESE DRAWINGS. ANY ADDITIONAL MATERIAL WILL BE BILLED SEPARATELY FROM THE ORIGINAL PURCHASE ORDER.

SIGNATURE DATE

THIS ORDER CANNOT BE RELEASED FOR PRODUCTION WITHOUT YOUR SIGNATURE!

C

B

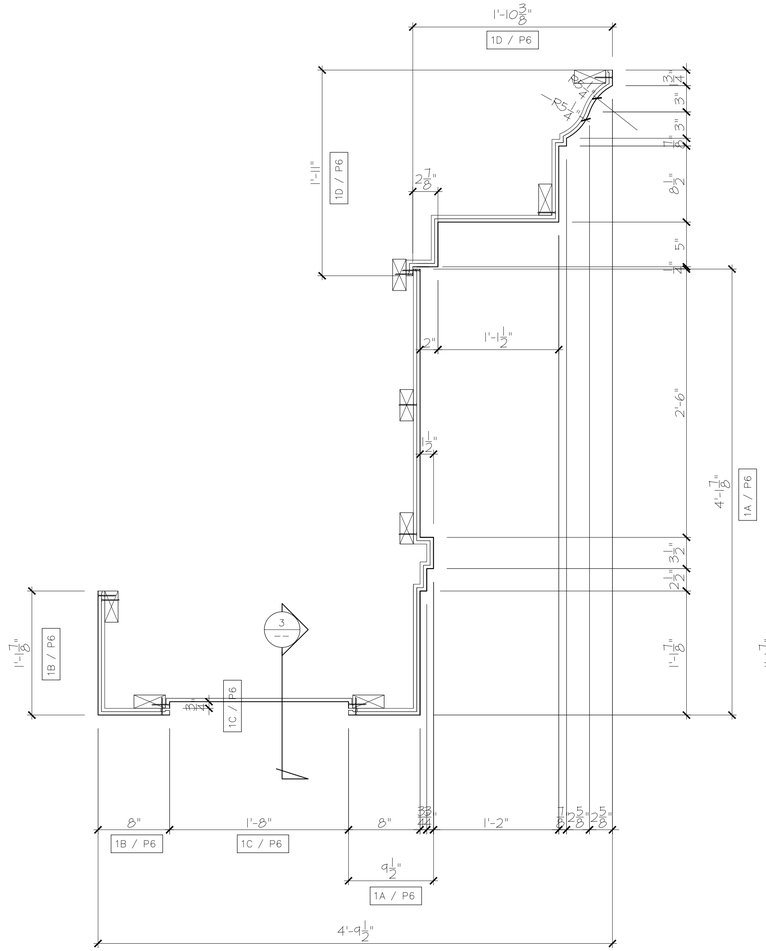

2 DETAIL SECTION
SCALE : 1 1/2" = 1'-0"

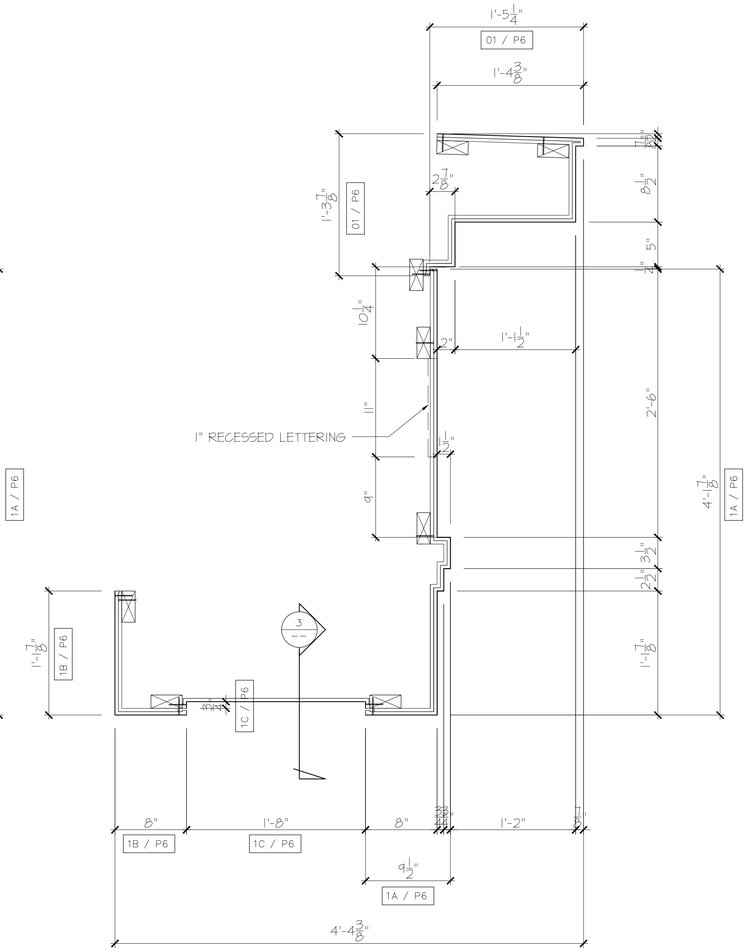

1 DETAIL SECTION
SCALE : 1 1/2" = 1'-0"

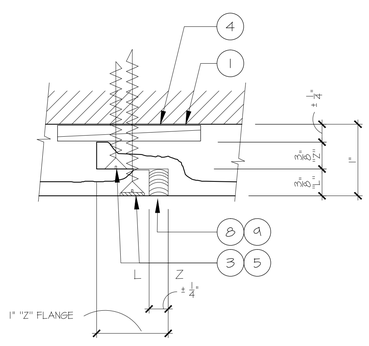

1

REQ'D. : (3)	01 / P6	ECHO STONE CORNICE 1'-3 7/8"H x 1'-5 1/4"D 9'-11 3/4" STRAIGHT LENGTH	Z/L
(4)	1A / P6	ECHO STONE CORNICE 4'-1 7/8"H x 9 1/2"D 4'-11 3/4" STRAIGHT LENGTH	Z/L
(5)	1B / P6	ECHO STONE CORNICE 1'-1 7/8"H x 8"D 7'-6" STRAIGHT LENGTH	Z/L
(5)	1C / P6	ECHO STONE CORNICE 3/4"H x 1'-8"D 7'-6" STRAIGHT LENGTH	Z/L
(6)	1D / P6	ECHO STONE CORNICE 1'-11"H x 1'-10 3/8"D 4'-11 3/4" STRAIGHT LENGTH	Z/L
(2)	02 / P6	ECHO STONE CORNICE 1'-3 7/8"H x 1'-5 1/4"D 3'-0" STRAIGHT LENGTH	Z/L
(1)	2A / P6	ECHO STONE CORNICE W/LETTERING 4'-1 7/8"H x 9 1/2"D 9'-11 3/4" STRAIGHT LENGTH	Z/L
(1)	3A / P6	ECHO STONE CORNICE W/LETTERING 4'-1 7/8"H x 9 1/2"D 9'-11 3/4" STRAIGHT LENGTH	Z/L
(1)	4A / P6	ECHO STONE CORNICE W/LETTERING 4'-1 7/8"H x 9 1/2"D 9'-11 3/4" STRAIGHT LENGTH	Z/L
(2)	5A / P6	ECHO STONE CORNICE 4'-1 7/8"H x 9 1/2"D 3'-0" STRAIGHT LENGTH	Z/L

TOTAL: (30)

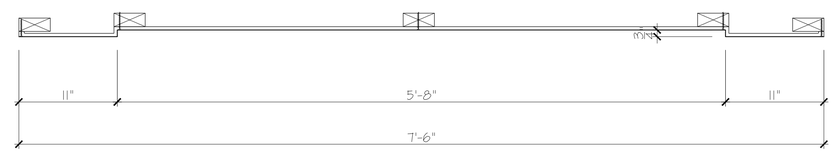

3 DETAIL SECTION 1C / P6
SCALE : 1 1/2" = 1'-0"

DETAIL SECTION | FULL | A | (F, F-2) | ECHO STONE CORNICE | AS SHOWN | 1

FILE NAME:
MEX. DATES:
DATE PLOTTED:

FIRST CLASS ARCHITECTURAL PRODUCTS
1-888-514-8141

FIRST CLASS
Building Products, Inc.
3600 DALLAS HIGHWAY
SUITE 230-387
MARIETTA GA 30064
WWW.FIRSTCLASSBP.COM

THESE PLANS AND THE DESIGNS CONTAINED THEREIN ARE THE SOLE PROPERTY First Class Building Products (HEREINAFTER DESIGNATED FCBP). THESE PLANS MAY NOT BE REPRODUCED OR USED WITHOUT WRITTEN PERMISSION OF DEC. UNAUTHORIZED USE SHALL INVITE A CLAIM FOR COMPENSATION BY FCBP. ALL FABRICATORS, CONTRACTORS INDICATED AND OTHERS UTILIZING THESE PLANS IN CONNECTION WITH THIS PROJECT ARE RESPONSIBLE FOR THEIR OWN MEASUREMENTS AND DIMENSIONS ON THE JOB. PLUMBING AND ELECTRICAL INFORMATION AND OUTLETS ARE FOR THE SOLE PURPOSE OF INDICATING THE REQUIREMENTS OF THE FIXTURES AND EQUIPMENT. STRUCTURAL FCBP ASSUMES NO RESPONSIBILITY FOR WORK DONE BY CONTRACTORS, NOR FOR ANY CHANGES MADE NECESSARY BY LOCAL BUILDING CODES, ORDINANCES CONDITIONS, OR BY THE SUBSTITUTION OF EQUIPMENT OTHER THAN THOSE SPECIFIED. THESE PLANS ARE ISSUED AS GENERAL GUIDELINES ONLY. FCBP ASSUMES NO RESPONSIBILITY FOR EXAMINING AND BECOMING FAMILIAR WITH SAID GENERAL NOTES BEFORE COMMENCING ANY WORK DONE ON THIS PROJECT. ANY INCONSISTANCIES BETWEEN THESE PLANS, THE GENERAL NOTES, AND THE FABRICATORS, CONTRACTORS, AND ALL OTHER PERSONS UTILIZING THESE PLANS ARE ADVISED THAT THEY ARE RESPONSIBLE FOR EXAMINING AND BECOMING FAMILIAR LOCAL BUILDING CODES, OR ORDINANCES, MUST IMMEDIATELY BE CALLED TO THE ATTENTION OF FCBP IN WRITING SO THAT ANY INCONSISTANCIES CAN BE RESOLVED. FCBP IS NOT RESPONSIBLE FOR ANY ARCHITECTURAL OR ENGINEERING DETAILS OR SPECIFICATIONS. THE USE BY ANY PERSON OR FIRM OF THESE PLANS OR ANY PART THEREOF SHALL NOT IN ANY WAY SUBJECT FCBP TO ANY COST OR DAMAGES FOR ANY ERROR OR OMISSION CONTAINED THEREIN.

No.	REVISION	DATE	BY
1	CLIENT UPDATE	3-10-11	DS

REVISIONS

RADFORD UNIVERSITY
RADFORD, VA
WHITING-TURNER CONTRACTING

SCALE	AS SHOWN
DRAWN BY	DS
DEC PROJ. MGR.	
APPROVED BY	
QUOTE NO.	13148-2
DATE	12-29-10

ECHO STONE CORNICE

SHEET No.
P6
JOB NO. 10-2861

WHITING TURNER CONTRACTING

I HAVE REVIEWED THESE DRAWINGS AND THEY ARE APPROVED FOR PRODUCTION. MY SIGNATURE BELOW CONFIRMS MY UNDERSTANDING AND ACCEPTANCE OF THE FOLLOWING CONDITIONS.

1. ANY CHANGES TO THESE DRAWINGS NOT INITIALED BY ME WILL BE IGNORED BY FCBP.
2. ANY CHANGES TO THESE DRAWINGS MAY RESULT IN A PRICE ADJUSTMENT.
3. ANY UNCORRECTED ERRORS CONTAINED IN THESE DRAWINGS ARE MY RESPONSIBILITY.
4. ANY CHANGES TO THESE DRAWINGS WHICH CREATE UNCORRECTED ERRORS ARE MY RESPONSIBILITY.
5. FCBP HAS CONTRACTED TO SUPPLY THE MATERIAL QUANTITIES PRINTED ON THESE DRAWINGS. ANY ADDITIONAL MATERIAL WILL BE BILLED SEPARATELY FROM THE ORIGINAL PURCHASE ORDER.

SIGNATURE DATE

THIS ORDER CANNOT BE RELEASED FOR PRODUCTION WITHOUT YOUR SIGNATURE!

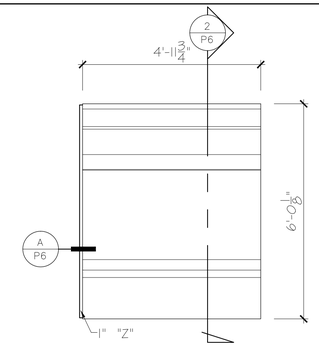

5 ELEVATION
SCALE : 1/2" = 1'-0"
1D / P6
1A / P6

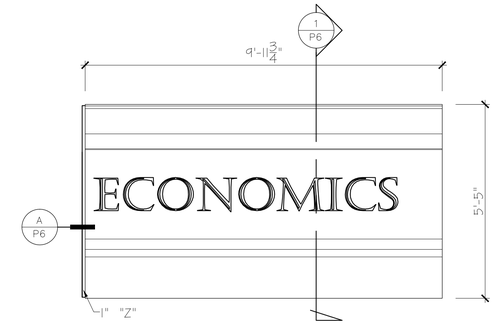

1 ELEVATION
SCALE : 1/2" = 1'-0"
01 / P6
2A / P6

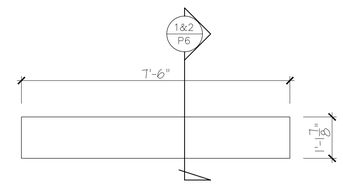

6 ELEVATION
SCALE : 1/2" = 1'-0"
1B / P6

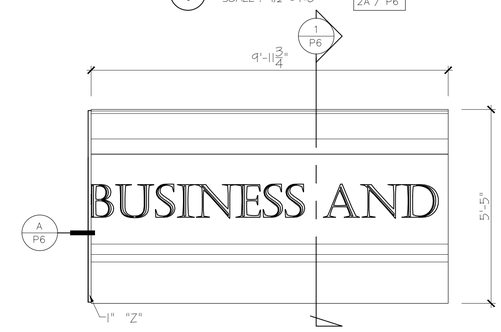

2 ELEVATION
SCALE : 1/2" = 1'-0"
01 / P6
3A / P6

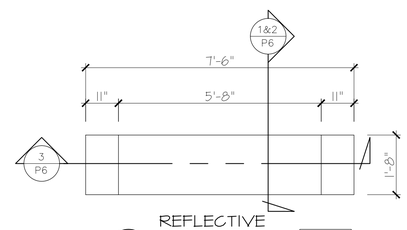

7 REFLECTIVE PLAN VIEW
SCALE : 1/2" = 1'-0"
1C / P6

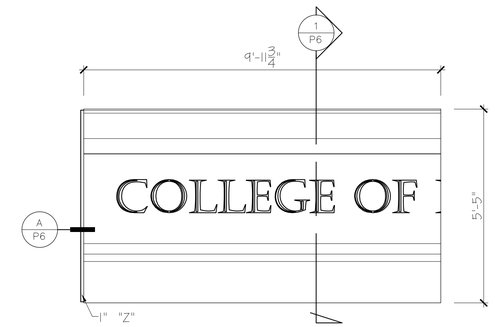

3 ELEVATION
SCALE : 1/2" = 1'-0"
01 / P6
4A / P6

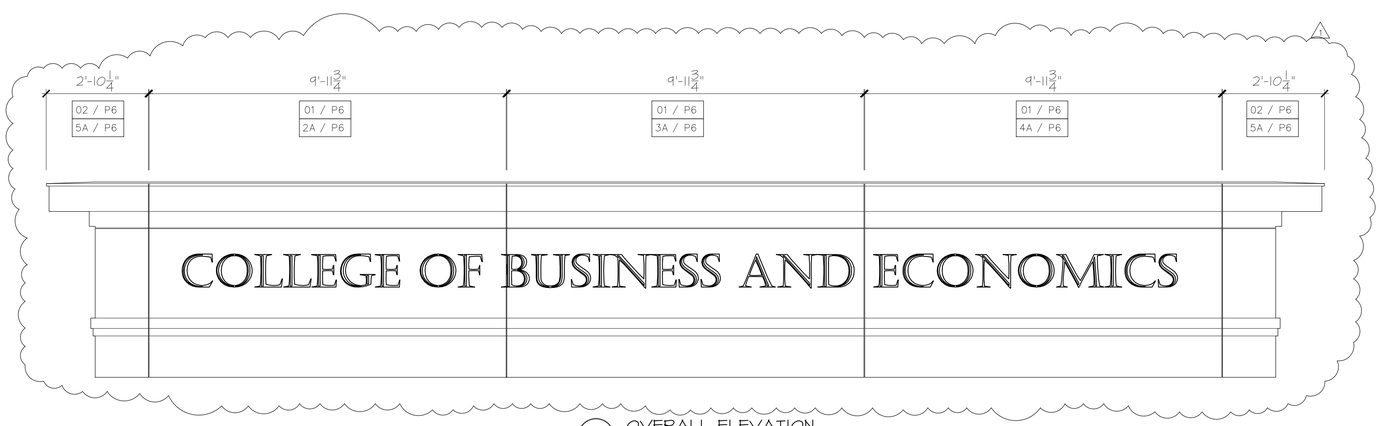

8 OVERALL ELEVATION
SCALE : 1/2" = 1'-0"

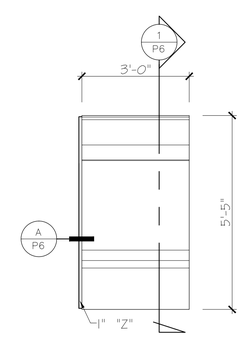

4 ELEVATION
SCALE : 1/2" = 1'-0"
02 / P6
5A / P6

FIRST CLASS ARCHITECTURAL PRODUCTS
1-888-514-8141

FIRST CLASS
Building Products, Inc.
3600 DALLAS HIGHWAY
SUITE 230-387
MARIETTA GA 30064
WWW.FIRSTCLASSBP.COM

THESE PLANS AND THE DESIGNS CONTAINED THEREIN ARE THE SOLE PROPERTY First Class Building Products (HEREINAFTER DESIGNATED FCBP). THESE PLANS MAY NOT BE REPRODUCED OR USED WITHOUT WRITTEN PERMISSION OF DEC. UNAUTHORIZED USE SHALL INVITE A CLAIM FOR COMPENSATION BY FCBP. ALL FABRICATORS, CONTRACTORS INDICATED AND OTHERS UTILIZING THESE PLANS IN CONNECTION WITH THIS PROJECT ARE RESPONSIBLE FOR THEIR OWN MEASUREMENTS AND DIMENSIONS ON THE JOB. PLUMBING AND ELECTRICAL INFORMATION AND OUTLETS ARE FOR THE SOLE PURPOSE OF INDICATING THE REQUIREMENTS OF THE FIXTURES AND EQUIPMENT., STRUCTURAL FCBP ASSUMES NO RESPONSIBILITY FOR WORK DONE BY CONTRACTORS, NOR FOR ANY CHANGES MADE NECESSARY BY LOCAL BUILDING CODES, ORDINANCES CONDITIONS, OR BY THE SUBSTITUTION OR CHANGES IN EQUIPMENT SHOWN ON THESE PLANS. REFERENCE IS MADE TO THE GENERAL NOTES WHICH ARE PART OF THESE PLANS, AND FABRICATORS, CONTRACTORS, AND ALL OTHER PERSONS UTILIZING THESE PLANS ARE ADVISED THAT THEY ARE RESPONSIBLE FOR EXAMINING AND BECOMING FAMILIAR WITH ALL GENERAL NOTES. DEPARTURES FROM THESE PLANS WITHOUT PRIOR WRITTEN APPROVAL OF FCBP ARE NOT PERMITTED. ANY DEVIATIONS MUST IMMEDIATELY BE CALLED TO THE ATTENTION OF FCBP. ANY WORK DONE BY THAT ANY PERSONS MAY BE REQUIRED LOCAL BUILDING CODES, ORDINANCES, DETAILS OR SPECIFICATIONS. THE USE BY ANY PERSON OR FIRM OF THESE PLANS OR ANY PART THEREOF SHALL NOT IN ANY WAY SUBJECT FCBP TO ANY COST OR DAMAGES FOR ANY ERROR OR OMISSION CONTAINED THEREIN.

No.	REVISION	DATE	BY
1	CLIENT UPDATE	3-10-11	DS

REVISIONS

RADFORD UNIVERSITY
RADFORD, VA
WHITING-TURNER CONTRACTING

SCALE	AS SHOWN
DRAWN BY	DS
DEC PROJ. MGR.	
APPROVED BY	
QUOTE NO.	13148-2
DATE	12-29-10

ECHO STONE CORNICE

SHEET No.
P6-CONT.
JOB NO. 10-2861

BUCKS EDITION - JANUARY 2004 BY: JAY
FILE NAME:
MEX. DATES:
DATE PLOTTED:

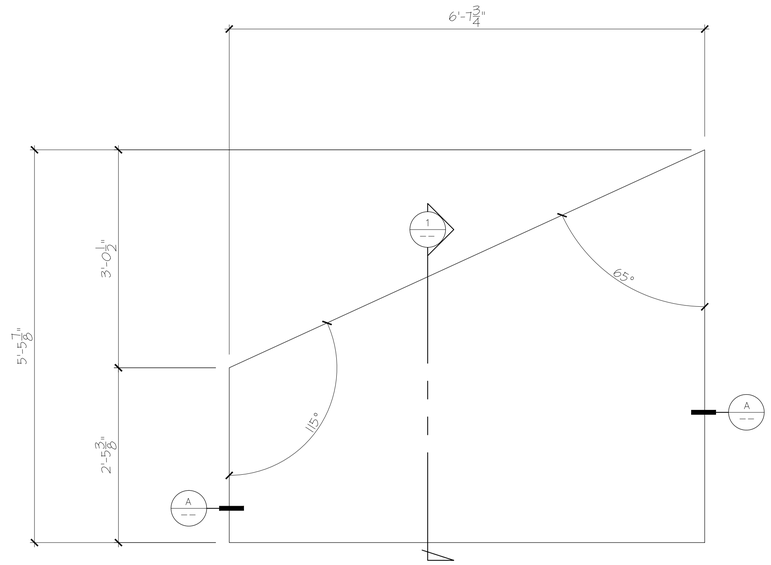

3 ELEVATION 02 / P7
SCALE : 1" = 1'-0" 03 / P7 MIRROR

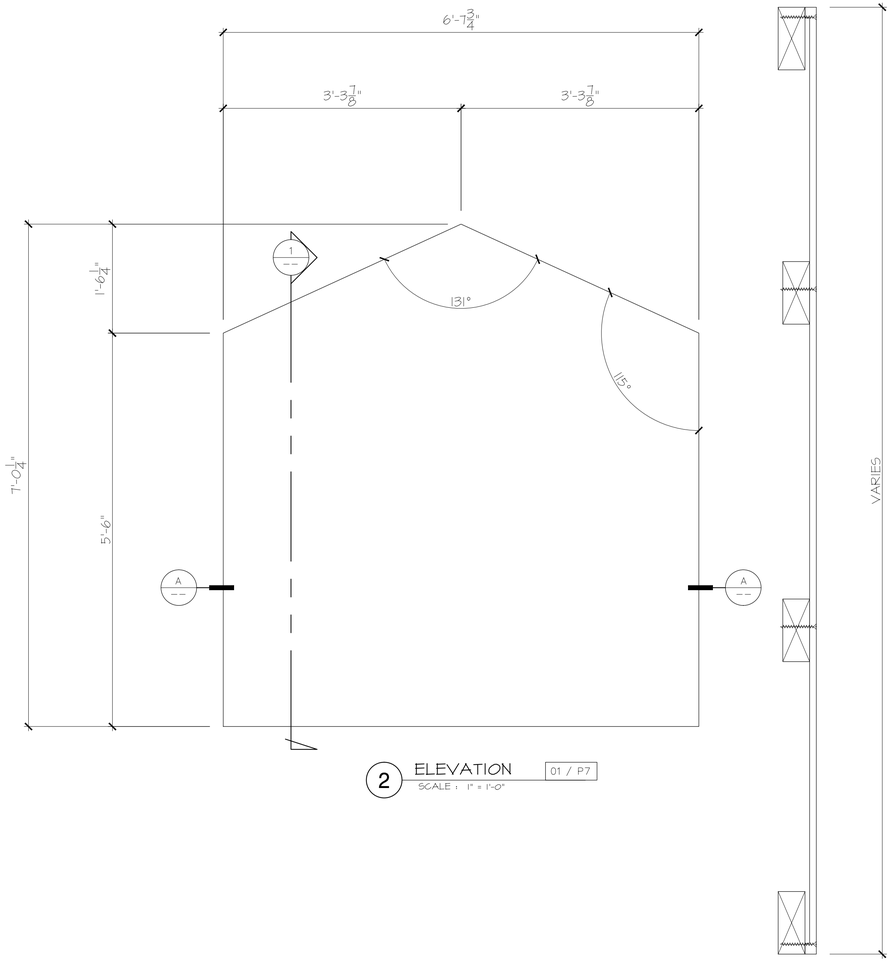

2 ELEVATION 01 / P7
SCALE : 1" = 1'-0"

1 DETAIL SECTION
SCALE : 3" = 1'-0"

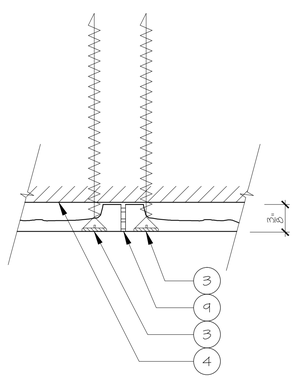

WHITING TURNER CONTRACTING

I HAVE REVIEWED THESE DRAWINGS AND THEY ARE APPROVED FOR PRODUCTION. MY SIGNATURE BELOW CONFIRMS MY UNDERSTANDING AND ACCEPTANCE OF THE FOLLOWING CONDITIONS.

1. ANY CHANGES TO THESE DRAWINGS NOT INITIALED BY ME WILL BE IGNORED BY FCBP.
2. ANY CHANGES TO THESE DRAWINGS MAY RESULT IN A PRICE ADJUSTMENT.
3. ANY UNCORRECTED ERRORS CONTAINED IN THESE DRAWINGS ARE MY RESPONSIBILITY.
4. ANY CHANGES TO THESE DRAWINGS WHICH CREATE UNCORRECTED ERRORS ARE MY RESPONSIBILITY.
5. FCBP HAS CONTRACTED TO SUPPLY THE MATERIAL QUANTITIES PRINTED ON THESE DRAWINGS. ANY ADDITIONAL MATERIAL WILL BE BILLED SEPARATELY FROM THE ORIGINAL PURCHASE ORDER.

SIGNATURE DATE

THIS ORDER CANNOT BE RELEASED FOR PRODUCTION WITHOUT YOUR SIGNATURE!

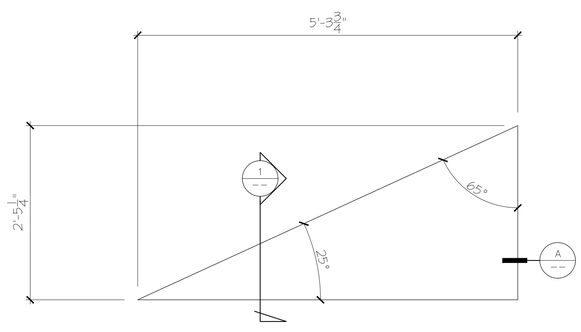

4 ELEVATION 04 / P7
SCALE : 1" = 1'-0" 05 / P7 MIRROR

REQ'D. :(1) 01 / P7 ECHO STONE FLAT PANEL 7'-0 1/4"H x 3/8"D x 6'-7 3/4"W
(1) 02 / P7 ECHO STONE FLAT PANEL 5'-5 7/8"H x 3/8"D x 6'-7 3/4"W
(1) 03 / P7 ECHO STONE FLAT PANEL 5'-5 7/8"H x 3/8"D x 6'-7 3/4"W
(1) 04 / P7 ECHO STONE FLAT PANEL 2'-5 1/4"H x 3/8"D x 5'-3 3/4"W
(1) 05 / P7 ECHO STONE FLAT PANEL 2'-5 1/4"H x 3/8"D x 5'-3 3/4"W

TOTAL: (5)

FIRST CLASS ARCHITECTURAL PRODUCTS
1-888-514-8141

FIRST CLASS
Building Products, Inc.
3600 DALLAS HIGHWAY
SUITE 230-387
MARIETTA GA 30064
WWW.FIRSTCLASSBP.COM

THESE PLANS AND THE DESIGNS CONTAINED THEREIN ARE THE SOLE PROPERTY First Class Building Products (HEREINAFTER DESIGNATED FCBP). THESE PLANS MAY NOT BE REPRODUCED OR USED WITHOUT WRITTEN PERMISSION OF DEC. UNAUTHORIZED USE SHALL INVITE A CLAIM FOR COMPENSATION BY FCBP. ALL FABRICATORS, CONTRACTORS INDICATED AND OTHERS UTILIZING THESE PLANS IN CONNECTION WITH THIS PROJECT ARE RESPONSIBLE FOR THEIR OWN MEASUREMENTS AND DIMENSIONS ON THE JOB. PLUMBING AND ELECTRICAL INFORMATION AND OUTLETS ARE FOR THE SOLE PURPOSE OF INDICATING THE REQUIREMENTS OF THE FIXTURES AND EQUIPMENT. STRUCTURAL FCBP ASSUMES NO RESPONSIBILITY FOR WORK DONE BY CONTRACTORS, NOR FOR ANY CHANGES MADE NECESSARY BY LOCAL BUILDING CODES, ORDINANCES CONDITIONS, OR BY THE SUBSTITUTION OR CHANGES IN EQUIPMENT SHOWN ON THESE PLANS. REFERENCE IS MADE TO THE GENERAL NOTES WHICH ARE PART OF THESE PLANS, AND FURNISHING CONTRACTORS SHALL OTHERWISE PROVIDE ALL OTHER DETAILS NECESSARY TO COMPLETE THE WORK. ALL DIMENSIONS TO BE VERIFIED ON THE JOB WITH SAID GENERAL NOTES BEFORE COMMENCING ANY WORK. DONE ON THIS PROJECT. ANY INCONSISTANCIES BETWEEN THESE PLANS, THE GENERAL NOTES, AND THE LOCAL BUILDING CODES, OR ORDINANCES, MUST IMMEDIATELY BE CALLED TO THE ATTENTION OF FCBP IN WRITING SO THAT ANY INCONSISTANCIES CAN BE RESOLVED. FCBP IS NOT RESPONSIBLE FOR ANY ARCHITECTURAL OR ENGINEERING DETAILS OR SPECIFICATIONS. THE USE BY ANY PERSON OR FIRM OF THESE PLANS OR ANY PART THEREOF SHALL NOT IN ANY WAY SUBJECT FCBP TO ANY COST OR DAMAGES FOR ANY ERROR OR OMISSION CONTAINED THEREIN.

No.	REVISION	DATE	BY
1	CLIENT UPDATE	3-10-11	DS

REVISIONS

RADFORD UNIVERSITY
RADFORD, VA
WHITING-TURNER CONTRACTING

SCALE	AS SHOWN
DRAWN BY	DS
DEC PROJ. MGR.	
APPROVED BY	
QUOTE NO.	13148-2
DATE	12-29-10

ECHO STONE FLAT PANEL

SHEET No. P7
JOB NO. 10-2861

DETAIL SECTION | FULL | A | (F-1) | ECHO STONE FLAT PANEL | AS SHOWN | 1

FILE NAME:
MEX. DATES:
DATE PLOTTED:

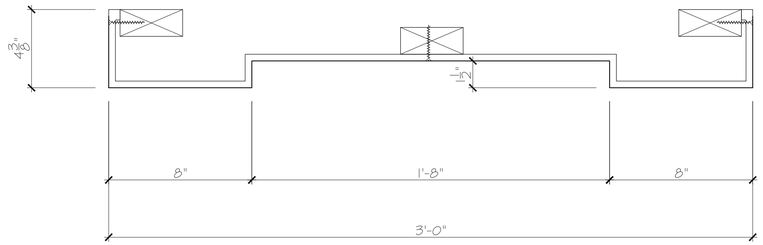

1 DETAIL SECTION
SCALE : 3" = 1'-0"

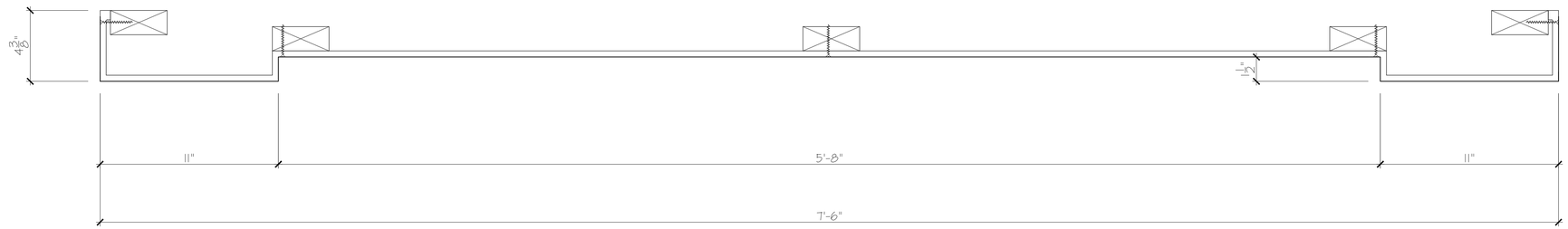

2 DETAIL SECTION
SCALE : 3" = 1'-0"

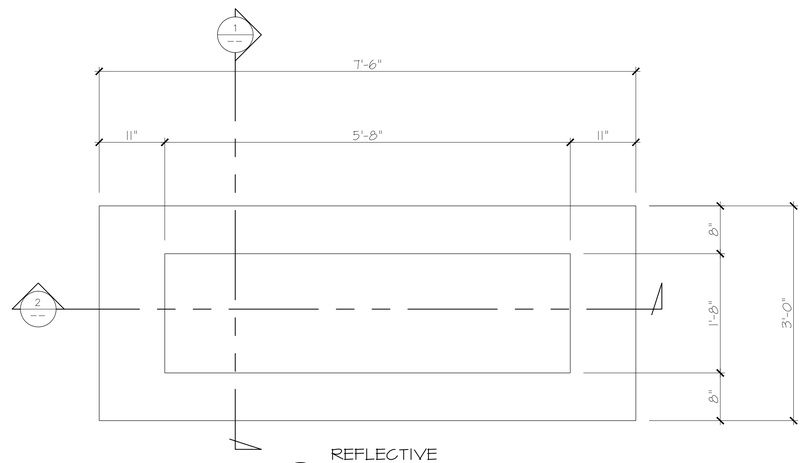

3 REFLECTIVE PLAN VIEW
SCALE : 1" = 1'-0"

WHITING TURNER CONTRACTING

I HAVE REVIEWED THESE DRAWINGS AND THEY ARE APPROVED FOR PRODUCTION. MY SIGNATURE BELOW CONFIRMS MY UNDERSTANDING AND ACCEPTANCE OF THE FOLLOWING CONDITIONS.

1. ANY CHANGES TO THESE DRAWINGS NOT INITIALED BY ME WILL BE IGNORED BY FCBP.
2. ANY CHANGES TO THESE DRAWINGS MAY RESULT IN A PRICE ADJUSTMENT.
3. ANY UNCORRECTED ERRORS CONTAINED IN THESE DRAWINGS ARE MY RESPONSIBILITY.
4. ANY CHANGES TO THESE DRAWINGS WHICH CREATE UNCORRECTED ERRORS ARE MY RESPONSIBILITY.
5. FCBP HAS CONTRACTED TO SUPPLY THE MATERIAL QUANTITIES PRINTED ON THESE DRAWINGS. ANY ADDITIONAL MATERIAL WILL BE BILLED SEPARATELY FROM THE ORIGINAL PURCHASE ORDER.

SIGNATURE DATE

THIS ORDER CANNOT BE RELEASED FOR PRODUCTION WITHOUT YOUR SIGNATURE!

REQ'D. :(2) 01 / P8 ECHO STONE SOFFIT PANEL
4 3/8"H x 3'-0"D
7'-6" STRAIGHT LENGTH

TOTAL: (2)

FIRST CLASS ARCHITECTURAL PRODUCTS
1-888-514-8141

FIRST CLASS
Building Products, Inc.
3600 DALLAS HIGHWAY
SUITE 230-387
MARIETTA GA 30064
WWW.FIRSTCLASSBP.COM

THESE PLANS AND THE DESIGNS CONTAINED THEREIN ARE THE SOLE PROPERTY First Class Building Products (HEREINAFTER DESIGNATED FCBP). THESE PLANS MAY NOT BE REPRODUCED OR USED WITHOUT WRITTEN PERMISSION OF DEC. UNAUTHORIZED USE SHALL INVITE A CLAIM FOR COMPENSATION BY FCBP. ALL FABRICATORS, CONTRACTORS INDICATED AND OTHERS UTILIZING THESE PLANS IN CONNECTION WITH THIS PROJECT ARE RESPONSIBLE FOR THEIR OWN MEASUREMENTS AND DIMENSIONS ON THE JOB. PLUMBING AND ELECTRICAL INFORMATION AND OUTLETS ARE FOR THE SOLE PURPOSE OF INDICATING THE REQUIREMENTS OF THE FIXTURES AND EQUIPMENT. STRUCTURAL ECHANICAL ENGINEERING IS NOT INCLUDED. FCBP DOES NOT RESPONSIBLE FOR CODE VIOLATIONS, CHANGES IN EQUIPMENT SHOWN ON THESE PLANS, REFERENCE IS MADE TO THE GENERAL NOTES WHICH ARE PART OF THESE PLANS, AND OR BY THE SUBSTITUTION OR CHANGES IN EQUIPMENT SHOWN ON THESE PLANS. ALL PLANS ARE ADVISED THAT THEY ARE RESPONSIBLE FOR EXAMINING AND BECOMING FAMILIAR FABRICATORS, CONTRACTORS, AND ALL OTHER PERSONS UTILIZING THESE PLANS ARE ADVISED THAT THEY ARE RESPONSIBLE FOR EXAMINING AND BECOMING FAMILIAR WITH SAID GENERAL NOTES BEFORE COMMENCING ANY WORK DONE ON THIS PROJECT. ANY INCONSISTANCIES BETWEEN THESE PLANS, THE GENERAL NOTES, AND THE LOCAL BUILDING CODES, OR ORDINANCES, MUST IMMEDIATELY BE CALLED TO THE ATTENTION OF FCBP IN WRITING SO THAT ANY INCONSISTANCIES CAN BE RESOLVED. FCBP IS NOT RESPONSIBLE FOR ANY ARCHITECTURAL OR ENGINEERING DETAILS OR SPECIFICATIONS. THE USE BY ANY PERSON OR FIRM OF THESE PLANS OR ANY PART THEREOF SHALL NOT IN ANY WAY SUBJECT FCBP TO ANY COST OR DAMAGES FOR ANY ERROR OR OMISSION CONTAINED THEREIN.

No.	REVISION	DATE	BY
1	CLIENT UPDATE	3-10-11	DS

REVISIONS

RADFORD UNIVERSITY
RADFORD, VA
WHITING-TURNER CONTRACTING

SCALE	AS SHOWN
DRAWN BY	DS
DEC PROJ. MGR.	
APPROVED BY	
QUOTE NO.	13148-2
DATE	12-29-10

ECHO STONE SOFFIT PANEL

SHEET No. P8
JOB NO. 10-2861

(F-3) ECHO STONE SOFFIT PANEL AS SHOWN 1

FILE NAME:
MEX. DATES:
DATE PLOTTED:

WHITING TURNER CONTRACTING

I HAVE REVIEWED THESE DRAWINGS AND THEY ARE APPROVED FOR PRODUCTION. MY SIGNATURE BELOW CONFIRMS MY UNDERSTANDING AND ACCEPTANCE OF THE FOLLOWING CONDITIONS.

1. ANY CHANGES TO THESE DRAWINGS NOT INITIALED BY ME WILL BE IGNORED BY FCBP.
2. ANY CHANGES TO THESE DRAWINGS MAY RESULT IN A PRICE ADJUSTMENT.
3. ANY UNCORRECTED ERRORS CONTAINED IN THESE DRAWINGS ARE MY RESPONSIBILITY.
4. ANY CHANGES TO THESE DRAWINGS WHICH CREATE UNCORRECTED ERRORS ARE MY RESPONSIBILITY.
5. FCBP HAS CONTRACTED TO SUPPLY THE MATERIAL QUANTITIES PRINTED ON THESE DRAWINGS. ANY ADDITIONAL MATERIAL WILL BE BILLED SEPARATELY FROM THE ORIGINAL PURCHASE ORDER.

SIGNATURE DATE

THIS ORDER CANNOT BE RELEASED FOR PRODUCTION WITHOUT YOUR SIGNATURE!

C

B

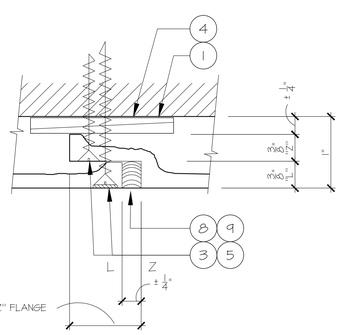

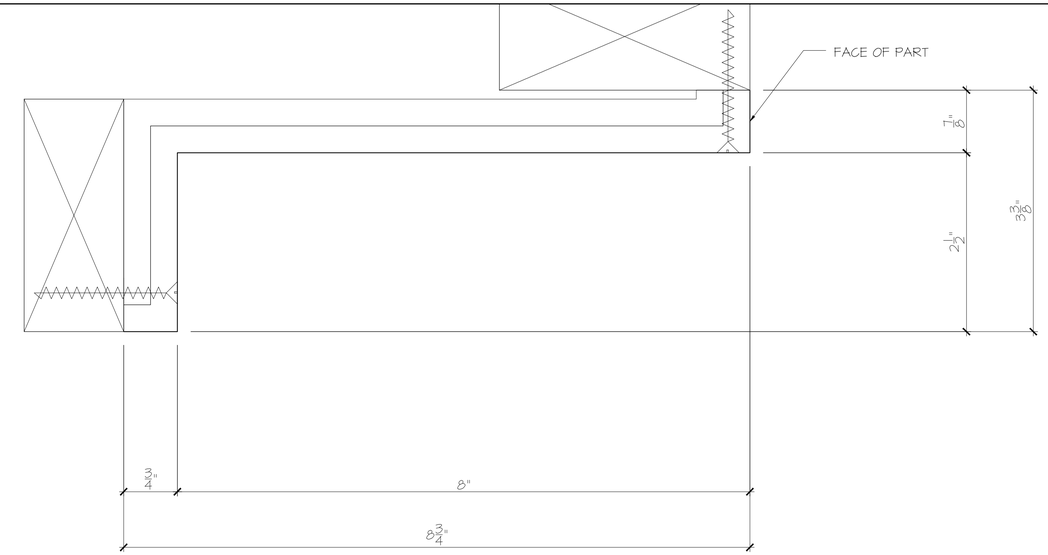

1 DETAIL SECTION
SCALE : FULL

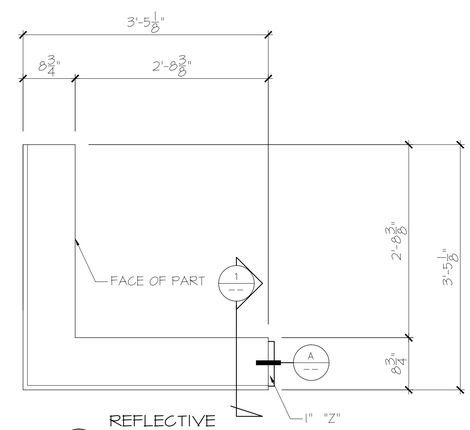

2 REFLECTIVE PLAN VIEW
SCALE : 1" = 1'-0"

REQ'D. :(12) 01 / P9 ECHO STONE SOFFIT TRIM - ISC
3 3/8"H x 8 3/4"D
3'-5 1/8" x 3'-5 1/8"

TOTAL: (12)

FIRST CLASS ARCHITECTURAL PRODUCTS
1-888-514-8141

FIRST CLASS
Building Products, Inc.
3600 DALLAS HIGHWAY
SUITE 230-387
MARIETTA GA 30064
WWW.FIRSTCLASSBP.COM

THESE PLANS AND THE DESIGNS CONTAINED THEREIN ARE THE SOLE PROPERTY First Class Building Products (HEREINAFTER DESIGNATED FCBP). THESE PLANS MAY NOT BE REPRODUCED OR USED WITHOUT WRITTEN PERMISSION OF DEC. UNAUTHORIZED USE SHALL INVITE A CLAIM FOR COMPENSATION BY FCBP. ALL FABRICATORS, CONTRACTORS INDICATED AND OTHERS UTILIZING THESE PLANS IN CONNECTION WITH THIS PROJECT ARE RESPONSIBLE FOR THEIR OWN MEASUREMENTS AND DIMENSIONS ON THE JOB. PLUMBING AND ELECTRICAL INFORMATION AND OUTLETS ARE FOR THE SOLE PURPOSE OF INDICATING THE REQUIREMENTS OF THE FIXTURES AND EQUIPMENT. STRUCTURAL FEASIBILITY AND CHANGES AS NECESSARY TO ACCOMMODATE THE WORK OF OTHER TRADES ARE THE RESPONSIBILITY OF THE ARCHITECT AND ENGINEER. NO CHANGES OR DEVIATIONS FROM THESE PLANS, REFERENCE IS MADE TO THE GENERAL NOTES, WHICH ARE PART OF THESE PLANS, AND FABRICATORS, CONTRACTORS, AND ALL OTHER PERSONS UTILIZING THESE PLANS ARE ADVISED THAT THEY ARE RESPONSIBLE FOR EXAMINING AND BECOMING FAMILIAR WITH SAID GENERAL NOTES BEFORE COMMENCING ANY WORK DONE ON THIS PROJECT. ANY INCONSISTANCIES BETWEEN THESE PLANS, THE GENERAL NOTES, AND THE LOCAL BUILDING CODES, OR ORDINANCES, MUST IMMEDIATELY BE CALLED TO THE ATTENTION OF FCBP IN WRITING SO THAT ANY INCONSISTANCIES CAN BE RESOLVED. FCBP IS NOT RESPONSIBLE FOR ANY ARCHITECTURAL OR ENGINEERING DETAILS OR SPECIFICATIONS. THE USE BY ANY PERSON OR FIRM OF THESE PLANS OR ANY PART THEREOF SHALL NOT IN ANY WAY SUBJECT FCBP TO ANY COST OR DAMAGES FOR ANY ERROR OR OMISSION CONTAINED THEREIN.

No.	REVISION	DATE	BY
1	CLIENT UPDATE	3-10-11	DS

REVISIONS

RADFORD UNIVERSITY
RADFORD, VA
WHITING-TURNER CONTRACTING

SCALE	AS SHOWN
DRAWN BY	DS
DEC PROJ. MGR.	
APPROVED BY	
QUOTE NO.	13148-2
DATE	12-29-10

ECHO STONE SOFFIT TRIM

SHEET No. P9

JOB NO. 10-2861

DETAIL SECTION | FULL | A | (F-4) | ECHO STONE SOFFIT TRIM | AS SHOWN | 1

SUBCON EDITION - JANUARY 2004 - BY: JAH
FILE NAME:
MEX. DATES:
DATE PLOTTED:

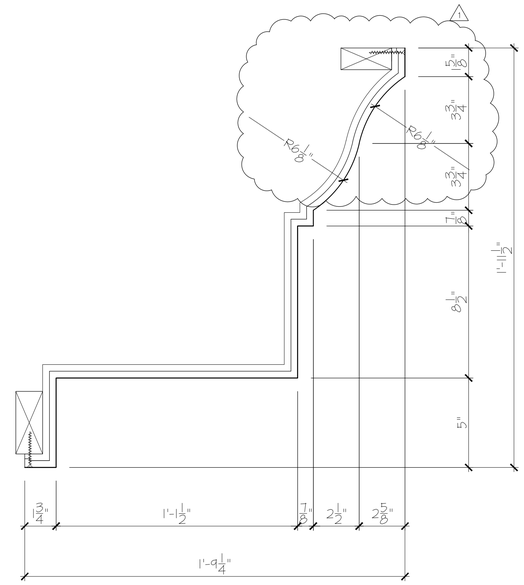

1 DETAIL SECTION
SCALE : 3" = 1'-0"

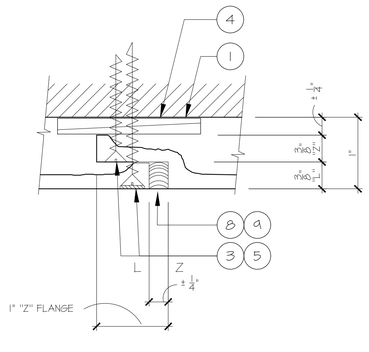

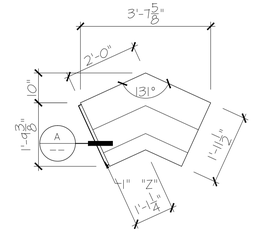

3 ELEVATION 04 / P10
SCALE : 1/2" = 1'-0"

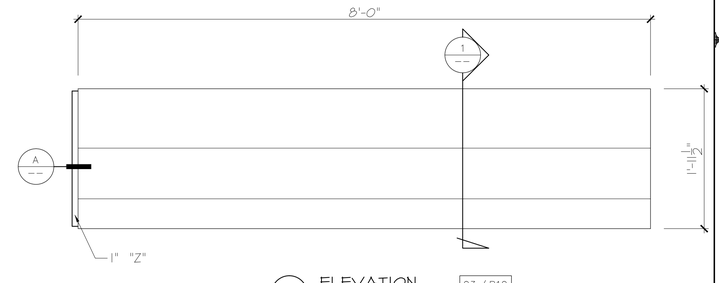

2 ELEVATION 03 / P10
SCALE : 1" = 1'-0"

WHITING TURNER CONTRACTING

I HAVE REVIEWED THESE DRAWINGS AND THEY ARE APPROVED FOR PRODUCTION. MY SIGNATURE BELOW CONFIRMS MY UNDERSTANDING AND ACCEPTANCE OF THE FOLLOWING CONDITIONS.

1. ANY CHANGES TO THESE DRAWINGS NOT INITIALED BY ME WILL BE IGNORED BY FCBP.
2. ANY CHANGES TO THESE DRAWINGS MAY RESULT IN A PRICE ADJUSTMENT.
3. ANY UNCORRECTED ERRORS CONTAINED IN THESE DRAWINGS ARE MY RESPONSIBILITY.
4. ANY CHANGES TO THESE DRAWINGS WHICH CREATE UNCORRECTED ERRORS ARE MY RESPONSIBILITY.
5. FCBP HAS CONTRACTED TO SUPPLY THE MATERIAL QUANTITIES PRINTED ON THESE DRAWINGS. ANY ADDITIONAL MATERIAL WILL BE BILLED SEPARATELY FROM THE ORIGINAL PURCHASE ORDER.

SIGNATURE DATE

THIS ORDER CANNOT BE RELEASED FOR PRODUCTION WITHOUT YOUR SIGNATURE!

REQ'D. :(6) 03 / P10 ECHO STONE CORNICE Z/L
1'-11 1/2"H x 1'-9 1/4"D
8'-0" STRAIGHT LENGTH

(1) 04 / P10 ECHO STONE CORNICE - PEAK CORNER Z/L
1'-11 1/2"H x 1'-9 1/4"D
2'-0" x 2'-0"

TOTAL: (7)

FIRST CLASS ARCHITECTURAL PRODUCTS
1-888-514-8141

FIRST CLASS
Building Products, Inc.
3600 DALLAS HIGHWAY
SUITE 230-387
MARIETTA GA 30064
WWW.FIRSTCLASSBP.COM

THESE PLANS AND THE DESIGNS CONTAINED THEREIN ARE THE SOLE PROPERTY First Class Building Products (HEREINAFTER DESIGNATED FCBP). THESE PLANS MAY NOT BE REPRODUCED OR USED WITHOUT WRITTEN PERMISSION OF FCBP. UNAUTHORIZED USE SHALL INVITE A CLAIM FOR COMPENSATION BY FCBP. ALL FABRICATORS, CONTRACTORS INDICATED AND OTHERS UTILIZING THESE PLANS IN CONNECTION WITH THIS PROJECT ARE RESPONSIBLE FOR THEIR OWN MEASUREMENTS AND DIMENSIONS ON THE JOB. PLUMBING AND ELECTRICAL INFORMATION AND OUTLETS ARE FOR THE SOLE PURPOSE OF INDICATING THE REQUIREMENTS OF THE FIXTURES AND EQUIPMENT. STRUCTURAL FEATURES, SUCH AS COLUMNS, BEAMS, OR WALLS SHOWN ON THESE PLANS, MUST BE VERIFIED BY THE GENERAL CONTRACTOR. FCBP ASSUMES NO RESPONSIBILITY FOR ANY CHANGES MADE TO STRUCTURAL FEATURES OR BY THE SUBSTITUTION OR CHANGES IN EQUIPMENT SHOWN ON THESE PLANS. REFERENCE IS MADE TO THE GENERAL NOTES WHICH ARE PART OF THESE PLANS, AND FABRICATORS, CONTRACTORS, AND ALL OTHER PERSONS UTILIZING THESE PLANS ARE ADVISED THAT THEY ARE RESPONSIBLE FOR EXAMINING AND BECOMING FAMILIAR WITH SAID GENERAL NOTES BEFORE COMMENCING ANY WORK DONE ON THIS PROJECT. ANY INCONSISTANCIES BETWEEN THESE PLANS, THE GENERAL NOTES, AND THE LOCAL BUILDING CODES, OR ORDINANCES, MUST IMMEDIATELY BE CALLED TO THE ATTENTION OF FCBP IN WRITING SO THAT ANY INCONSISTANCIES CAN BE RESOLVED. FCBP IS NOT RESPONSIBLE FOR ANY ARCHITECTURAL OR ENGINEERING DETAILS OR SPECIFICATIONS. THE USE BY ANY PERSON OR FIRM OF THESE PLANS OR ANY PART THEREOF SHALL NOT IN ANY WAY SUBJECT FCBP TO ANY COST OR DAMAGES FOR ANY ERROR OR OMISSION CONTAINED THEREIN.

No.	REVISION	DATE	BY
1	CLIENT UPDATE	3-10-11	DS

REVISIONS

RADFORD UNIVERSITY
RADFORD, VA
WHITING-TURNER CONTRACTING

SCALE	AS SHOWN
DRAWN BY	DS
DEC PROJ. MGR.	
APPROVED BY	
QUOTE NO.	13148-2
DATE	12-29-10

ECHO STONE CORNICE

SHEET No. P10
JOB NO. 10-2861

DETAIL SECTION | FULL | A | (G) | ECHO STONE CORNICE | AS SHOWN | 1

BORDER EDITION - JANUARY 2009 BY JAY
FILE NAME:
MEX. DATES:
DATE PLOTTED:

WHITING TURNER CONTRACTING

I HAVE REVIEWED THESE DRAWINGS AND THEY ARE APPROVED FOR PRODUCTION. MY SIGNATURE BELOW CONFIRMS MY UNDERSTANDING AND ACCEPTANCE OF THE FOLLOWING CONDITIONS.

1. ANY CHANGES TO THESE DRAWINGS NOT INITIALED BY ME WILL BE IGNORED BY FCBP.
2. ANY CHANGES TO THESE DRAWINGS MAY RESULT IN A PRICE ADJUSTMENT.
3. ANY UNCORRECTED ERRORS CONTAINED IN THESE DRAWINGS ARE MY RESPONSIBILITY.
4. ANY CHANGES TO THESE DRAWINGS WHICH CREATE UNCORRECTED ERRORS ARE MY RESPONSIBILITY.
5. FCBP HAS CONTRACTED TO SUPPLY THE MATERIAL QUANTITIES PRINTED ON THESE DRAWINGS. ANY ADDITIONAL MATERIAL WILL BE BILLED SEPARATELY FROM THE ORIGINAL PURCHASE ORDER.

SIGNATURE DATE

THIS ORDER CANNOT BE RELEASED FOR PRODUCTION WITHOUT YOUR SIGNATURE!

C

B

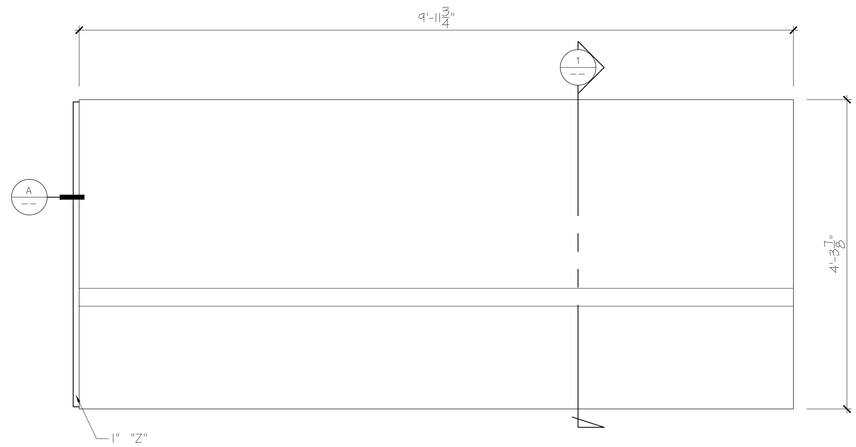

2 ELEVATION 01 / P11
SCALE : 1" = 1'-0"

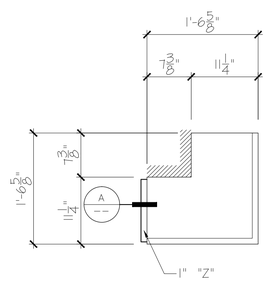

3 REFLECTIVE PLAN VIEW 02 / P11
SCALE : 1" = 1'-0"

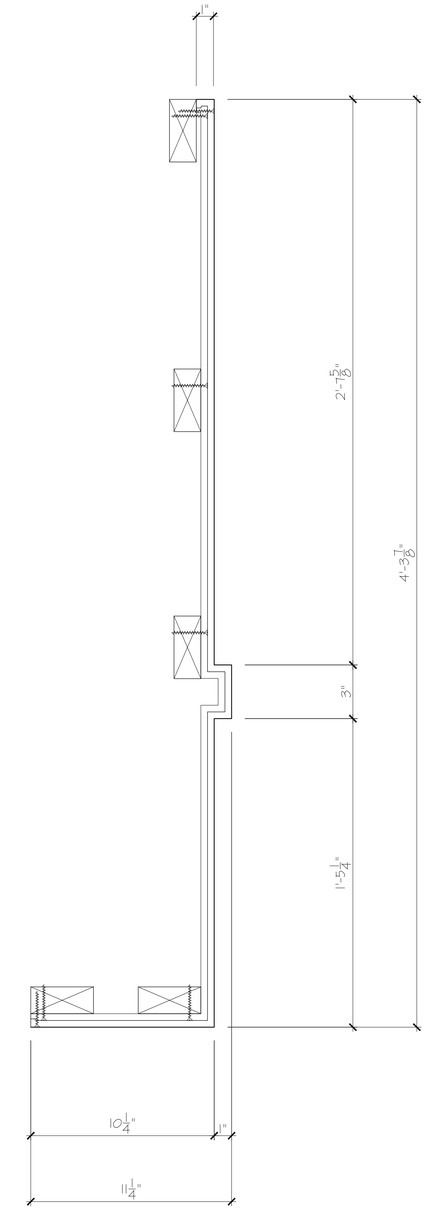

1 DETAIL SECTION
SCALE : 3" = 1'-0"

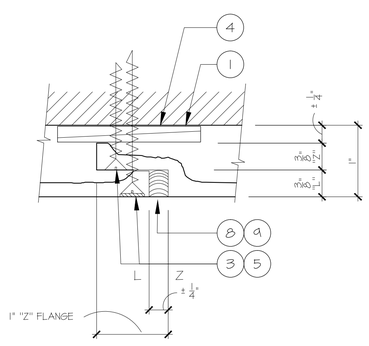

REQ'D. :(10) 01 / P11 ECHO STONE CORNICE Z/L
4'-3 7/8"H x 11 1/4"D
9'-11 3/4" STRAIGHT LENGTH

(4) 02 / P11 ECHO STONE CORNICE - 90° OSC Z/L
4'-3 7/8"H x 11 1/4"D
1'-6 5/8" x 1'-6 5/8" SQ.

TOTAL: (14)

DETAIL SECTION | FULL | A | (K) | ECHO STONE CORNICE | AS SHOWN | 1

FIRST CLASS ARCHITECTURAL PRODUCTS
1-888-514-8141

FIRST CLASS
Building Products, Inc.
3600 DALLAS HIGHWAY
SUITE 230-387
MARIETTA GA 30064
WWW.FIRSTCLASSBP.COM

THESE PLANS AND THE DESIGNS CONTAINED THEREIN ARE THE SOLE PROPERTY *First Class Building Products* (HEREINAFTER DESIGNATED FCBP). THESE PLANS MAY NOT BE REPRODUCED OR USED WITHOUT WRITTEN PERMISSION OF DEC. UNAUTHORIZED USE SHALL INVITE A CLAIM FOR COMPENSATION BY FCBP. ALL FABRICATORS, CONTRACTORS INDICATED AND OTHERS UTILIZING THESE PLANS IN CONNECTION WITH THIS PROJECT ARE RESPONSIBLE FOR THEIR OWN MEASUREMENTS AND DIMENSIONS ON THE JOB. PLUMBING AND ELECTRICAL INFORMATION AND OUTLETS ARE FOR THE SOLE PURPOSE OF INDICATING THE REQUIREMENTS OF THE FIXTURES AND EQUIPMENT. STRUCTURAL FCBP WILL NOT CHANGE OR ALTER STRUCTURAL DESIGNS TO ACCOMMODATE EQUIPMENT NOT SHOWN ON THESE PLANS, AND ANY REFERENCES MADE TO THE GENERAL NOTES SHEET OF THESE PLANS AND FABRICATORS, CONTRACTORS, AND ALL OTHER PERSONS UTILIZING THESE PLANS ARE ADVISED THAT THEY ARE RESPONSIBLE FOR EXAMINING AND BECOMING FAMILIAR WITH SAID GENERAL NOTES BEFORE COMMENCING ANY WORK DONE ON THIS PROJECT. ANY INCONSISTANCIES BETWEEN THESE PLANS, THE GENERAL NOTES, AND THE LOCAL BUILDING CODES, OR ORDINANCES, MUST IMMEDIATELY BE CALLED TO THE ATTENTION OF FCBP IN WRITING SO THAT ANY INCONSISTANCIES CAN BE RESOLVED. FCBP IS NOT RESPONSIBLE FOR ANY ARCHITECTURAL OR ENGINEERING DETAILS OR SPECIFICATIONS. THE USE BY ANY PERSON OR FIRM OF THESE PLANS OR ANY PART THEREOF SHALL NOT IN ANY WAY SUBJECT FCBP TO ANY COST OR DAMAGES FOR ANY ERROR OR OMISSION CONTAINED THEREIN.

No.	REVISION	DATE	BY
1	CLIENT UPDATE	3-10-11	DS

REVISIONS

RADFORD UNIVERSITY
RADFORD, VA
WHITING-TURNER CONTRACTING

SCALE	AS SHOWN
DRAWN BY	DS
DEC PROJ. MGR.	
APPROVED BY	
QUOTE NO.	13148-2
DATE	12-29-10

ECHO STONE CORNICE

SHEET No. P11

JOB NO. 10-2861

FILE NAME:
MEX. DATES:
DATE PLOTTED:

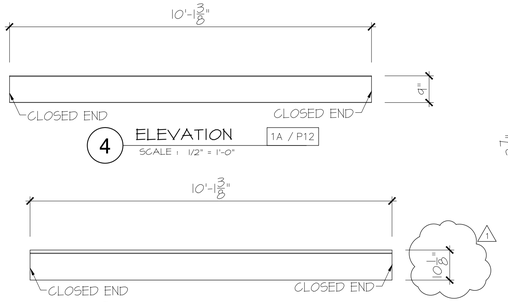

4 ELEVATION 1A / P12
SCALE : 1/2" = 1'-0"

5 ELEVATION 1B / P12
SCALE : 1/2" = 1'-0"

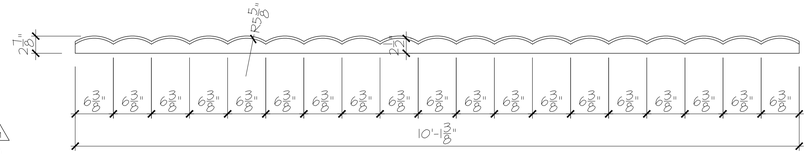

3 DETAIL SECTION 01 / P12
SCALE : 1" = 1'-0"

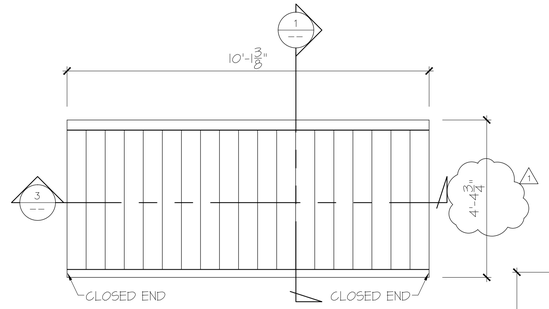

2 ELEVATION 01 / P12
SCALE : 1/2" = 1'-0"

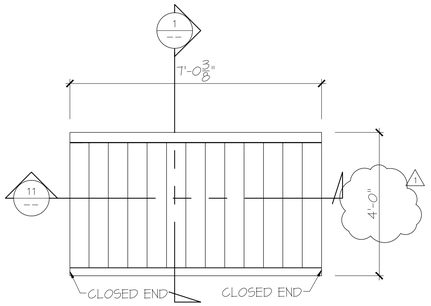

10 ELEVATION 03 / P12
SCALE : 1/2" = 1'-0"

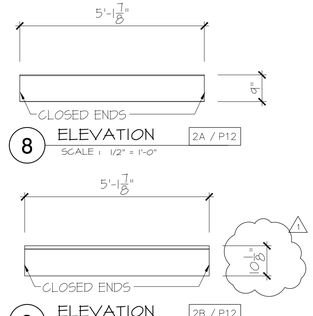

8 ELEVATION 2A / P12
SCALE : 1/2" = 1'-0"

9 ELEVATION 2B / P12
SCALE : 1/2" = 1'-0"

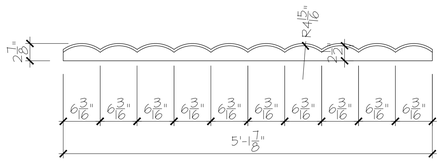

7 DETAIL SECTION 02 / P12
SCALE : 1" = 1'-0"

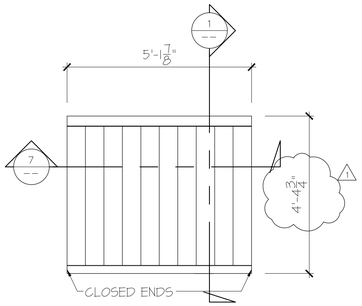

6 ELEVATION 02 / P12
SCALE : 1/2" = 1'-0"

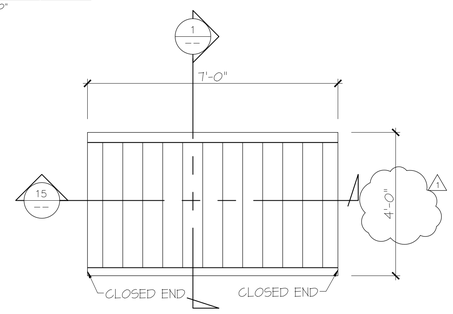

14 ELEVATION 04 / P12
SCALE : 1/2" = 1'-0"

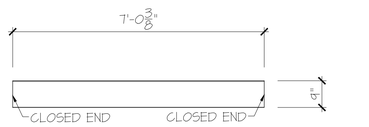

12 ELEVATION 3A / P12
SCALE : 1/2" = 1'-0"

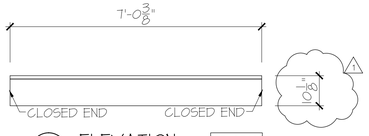

13 ELEVATION 3B / P12
SCALE : 1/2" = 1'-0"

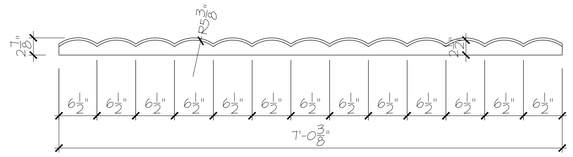

11 DETAIL SECTION 03 / P12
SCALE : 1" = 1'-0"

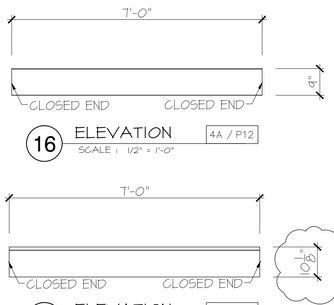

16 ELEVATION 4A / P12
SCALE : 1/2" = 1'-0"

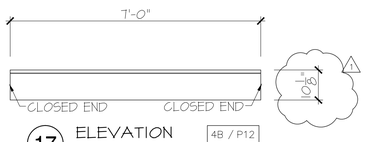

17 ELEVATION 4B / P12
SCALE : 1/2" = 1'-0"

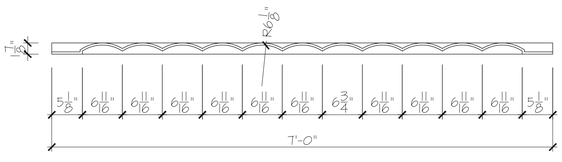

15 DETAIL SECTION 04 / P12
SCALE : 1" = 1'-0"

REQ'D. :

(3)	01 / P12	ECHO STONE PANEL 4'-4 3/4"H x 2 7/8"D 10'-1 3/8" STRAIGHT LENGTH	
(3)	1A / P12	ECHO STONE PANEL 9"H x 3 1/2"D 10'-1 3/8" STRAIGHT LENGTH	
(3)	1B / P12	ECHO STONE PANEL 10 1/8"H x 3 1/2"D 10'-1 3/8" STRAIGHT LENGTH	
(6)	02 / P12	ECHO STONE PANEL 4'-4 3/4"H x 2 7/8"D 5'-1 7/8" STRAIGHT LENGTH	
(6)	2A / P12	ECHO STONE PANEL 9"H x 3 1/2"D 5'-1 7/8" STRAIGHT LENGTH	
(6)	2B / P12	ECHO STONE PANEL 10 1/8"H x 3 1/2"D 5'-1 7/8" STRAIGHT LENGTH	
(3)	03 / P12	ECHO STONE PANEL 4'-0"H x 2 7/8"D 7'-0 3/8" STRAIGHT LENGTH	
(3)	3A / P12	ECHO STONE PANEL 9"H x 3 1/2"D 7'-0 3/8" STRAIGHT LENGTH	
(3)	3B / P12	ECHO STONE PANEL 10 1/8"H x 3 1/2"D 7'-0 3/8" STRAIGHT LENGTH	
(3)	04 / P12	ECHO STONE PANEL 4'-0"H x 2 7/8"D 7'-0" STRAIGHT LENGTH	
(3)	4A / P12	ECHO STONE PANEL 9"H x 3 1/2"D 7'-0" STRAIGHT LENGTH	
(3)	4B / P12	ECHO STONE PANEL 10 1/8"H x 3 1/2"D 7'-0" STRAIGHT LENGTH	

TOTAL: (45)

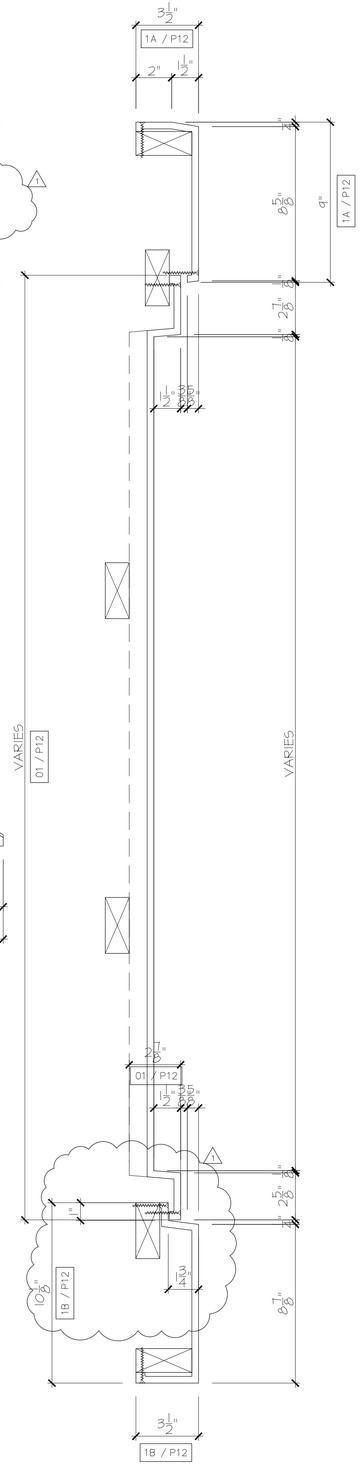

1 DETAIL SECTION
SCALE : 3" = 1'-0"

FIRST CLASS ARCHITECTURAL PRODUCTS
1-888-514-8141

FIRST CLASS
Building Products, Inc.
3600 DALLAS HIGHWAY
SUITE 230-387
MARIETTA GA 30064
WWW.FIRSTCLASSBP.COM

THESE PLANS AND THE DESIGNS CONTAINED THEREIN ARE THE SOLE PROPERTY First Class Building Products (HEREINAFTER DESIGNATED FCBP). THESE PLANS MAY NOT BE REPRODUCED OR USED WITHOUT WRITTEN PERMISSION OF (SEC. UNAUTHORIZED USE SHALL INVITE A CLAIM FOR COMPENSATION BY FCBP). ALL FABRICATORS, CONTRACTORS INDICATED AND OTHERS UTILIZING THESE PLANS IN CONNECTION WITH THIS PROJECT ARE RESPONSIBLE FOR THEIR OWN MEASUREMENTS AND DIMENSIONS ON THE JOB. PLUMBING AND ELECTRICAL INFORMATION AND OUTLETS ARE FOR THE SOLE PURPOSE OF INDICATING THE REQUIREMENTS OF THE FIXTURES AND EQUIPMENT. STRUCTURAL FEATURES AND ELEVATIONS MUST BE ADJUSTED TO SUIT ACTUAL CONDITIONS. FCBP ASSUMES NO RESPONSIBILITY FOR ANY CHANGES MADE IN THESE PLANS OR BY THE SUBSTITUTION OR CHANGES IN EQUIPMENT SHOWN ON THESE PLANS. REFERENCE IS MADE TO THE GENERAL NOTES WHICH ARE PART OF THESE PLANS. ALL FABRICATORS, CONTRACTORS, AND ALL OTHER PERSONS UTILIZING THESE PLANS ARE ADVISED THAT THEY ARE RESPONSIBLE FOR EXAMINING AND BECOMING FAMILIAR WITH SAID GENERAL NOTES BEFORE COMMENCING ANY WORK DONE ON THESE PLANS. THE GENERAL NOTES, AND THE LOCAL BUILDING CODES, OR ORDINANCES, MUST IMMEDIATELY BE CALLED TO THE ATTENTION OF FCBP IN WRITING SO THAT ANY INCONSISTANCIES CAN BE RESOLVED. FCBP IS NOT RESPONSIBLE FOR ANY ARCHITECTURAL OR ENGINEERING DETAILS OR SPECIFICATIONS. THE USE BY ANY PERSON OR FIRM OF THESE PLANS OR ANY PART THEREOF SHALL NOT IN ANY WAY SUBJECT FCBP TO ANY COST OR DAMAGES FOR ANY ERROR OR OMISSION CONTAINED THEREIN.

No.	REVISION	DATE	BY
1	CLIENT UPDATE	3-10-11	DS

REVISIONS

RADFORD UNIVERSITY
RADFORD, VA
WHITING-TURNER CONTRACTING

SCALE	AS SHOWN
DRAWN BY	DS
DEC PROJ. MGR.	
APPROVED BY	
QUOTE NO.	13148-2
DATE	12-29-10

ECHO STONE PANEL

SHEET No. P12
JOB NO. 10-2861

(L, M, M-I,)

ECHO STONE PANEL

AS SHOWN

1

FILE NAME:
MEX. DATES:
DATE PLOTTED:

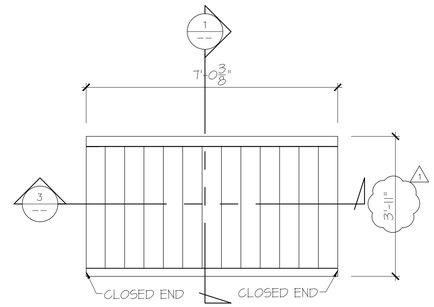

2 ELEVATION 01 / P13
SCALE : 1/2" = 1'-0"

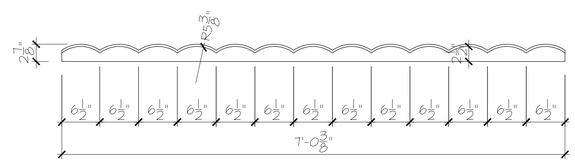

3 DETAIL SECTION 01 / P13
SCALE : 1" = 1'-0"

4 ELEVATION 1A / P13
SCALE : 1/2" = 1'-0"

5 ELEVATION 1B / P13
SCALE : 1/2" = 1'-0"

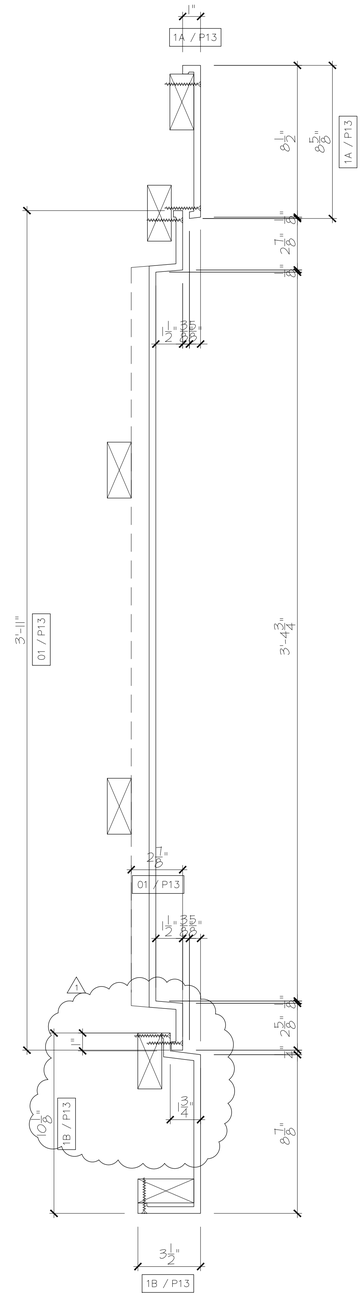

1 DETAIL SECTION
SCALE : 3" = 1'-0"

WHITING TURNER CONTRACTING

I HAVE REVIEWED THESE DRAWINGS AND THEY ARE APPROVED FOR PRODUCTION. MY SIGNATURE BELOW CONFIRMS MY UNDERSTANDING AND ACCEPTANCE OF THE FOLLOWING CONDITIONS.

1. ANY CHANGES TO THESE DRAWINGS NOT INITIALED BY ME WILL BE IGNORED BY FCBP.
2. ANY CHANGES TO THESE DRAWINGS MAY RESULT IN A PRICE ADJUSTMENT.
3. ANY UNCORRECTED ERRORS CONTAINED IN THESE DRAWINGS ARE MY RESPONSIBILITY.
4. ANY CHANGES TO THESE DRAWINGS WHICH CREATE UNCORRECTED ERRORS ARE MY RESPONSIBILITY.
5. FCBP HAS CONTRACTED TO SUPPLY THE MATERIAL QUANTITIES PRINTED ON THESE DRAWINGS. ANY ADDITIONAL MATERIAL WILL BE BILLED SEPARATELY FROM THE ORIGINAL PURCHASE ORDER.

SIGNATURE DATE

THIS ORDER CANNOT BE RELEASED FOR PRODUCTION WITHOUT YOUR SIGNATURE!

REQ'D. : (3)	01 / P13	ECHO STONE PANEL 3'-11"H x 2 7/8"D T'-0 3/8" STRAIGHT LENGTH	
(3)	1A / P13	ECHO STONE PANEL 8 5/8"H x 1"D T'-0 3/8" STRAIGHT LENGTH	
(3)	1B / P13	ECHO STONE PANEL 10 1/8"H x 3 1/2"D T'-0 3/8" STRAIGHT LENGTH	
TOTAL: (9)			

(L-1) ECHO STONE PANEL AS SHOWN 1

FIRST CLASS ARCHITECTURAL PRODUCTS
1-888-514-8141

FIRST CLASS
Building Products, Inc.
3600 DALLAS HIGHWAY
SUITE 230-387
MARIETTA GA 30064
WWW.FIRSTCLASSBP.COM

THESE PLANS AND THE DESIGNS CONTAINED THEREIN ARE THE SOLE PROPERTY First Class Building Products (HEREINAFTER DESIGNATED FCBP). THESE PLANS MAY NOT BE REPRODUCED OR USED WITHOUT WRITTEN PERMISSION OF FCBP. ALL FABRICATORS, CONTRACTORS, PLUMBERS, AND ELECTRICAL INFORMATION AND OUTLETS ARE FOR THE SOLE PURPOSE OF INDICATING THE REQUIREMENTS OF THE ENTIRES AND EQUIPMENT. STRUCTURAL FCBP ASSUMES NO RESPONSIBILITY FOR WORK DONE BY CONTRACTORS, NOR FOR ANY CHANGES MADE NECESSARY BY LOCAL BUILDING CODES, ORDINANCES CONDITIONS, OR BY THE SUBSTITUTION OR CHANGES IN EQUIPMENT SHOWN ON THESE PLANS. REFERENCE IS MADE TO THE GENERAL NOTES WHICH ARE PART OF THESE PLANS, AND FABRICATORS, CONTRACTORS, AND ALL OTHER PERSONS UTILIZING THESE PLANS ARE ADVISED THAT THEY ARE RESPONSIBLE FOR EXAMINING AND BECOMING FAMILIAR WITH SAID GENERAL NOTES BEFORE COMMENCING ANY WORK DONE ON THIS PROJECT. ANY INCONSISTANCIES BETWEEN THESE PLANS, THE GENERAL NOTES, AND THE LOCAL BUILDING CODES, OR ORDINANCES, MUST IMMEDIATELY BE CALLED TO THE ATTENTION OF FCBP IN WRITING SO THAT ANY INCONSISTANCIES CAN BE RESOLVED. FCBP IS NOT RESPONSIBLE FOR ANY ARCHITECTURAL OR ENGINEERING DETAILS OR SPECIFICATIONS THE USE BY ANY PERSON OR FIRM OF THESE PLANS OR ANY PART THEREOF SHALL NOT IN ANY WAY SUBJECT FCBP TO ANY COST OR DAMAGES FOR ANY ERROR OR OMISSION CONTAINED THEREIN.

No.	REVISION	DATE	BY
1	CLIENT UPDATE	3-10-11	DS

REVISIONS

RADFORD UNIVERSITY
RADFORD, VA
WHITING-TURNER CONTRACTING

SCALE	AS SHOWN
DRAWN BY	DS
DEC PROJ. MGR.	
APPROVED BY	
QUOTE NO.	13148-2
DATE	12-29-10

ECHO STONE PANEL

SHEET No. P13
JOB NO. 10-2861

BORDER EDITION - JANUARY 2004 - BY: JAY
FILE NAME:
MEX. DATES:
DATE PLOTTED:

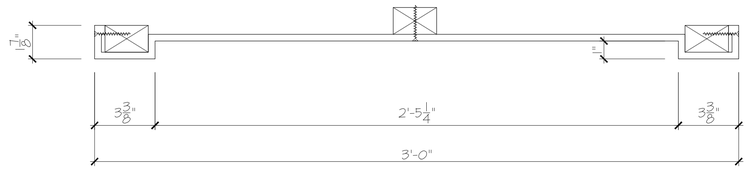

2 DETAIL SECTION
SCALE : 3" = 1'-0"

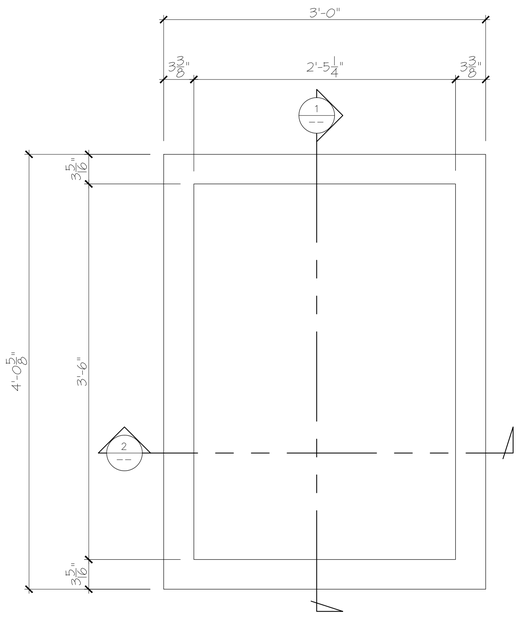

3 ELEVATION
SCALE : 1 1/2" = 1'-0"

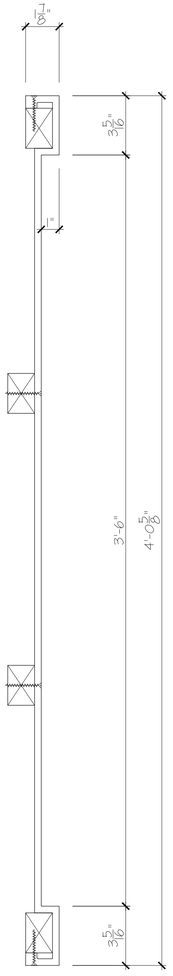

1 DETAIL SECTION
SCALE : 3" = 1'-0"

WHITING TURNER CONTRACTING

I HAVE REVIEWED THESE DRAWINGS AND THEY ARE APPROVED FOR PRODUCTION. MY SIGNATURE BELOW CONFIRMS MY UNDERSTANDING AND ACCEPTANCE OF THE FOLLOWING CONDITIONS.

1. ANY CHANGES TO THESE DRAWINGS NOT INITIALED BY ME WILL BE IGNORED BY FCBP.
2. ANY CHANGES TO THESE DRAWINGS MAY RESULT IN A PRICE ADJUSTMENT.
3. ANY UNCORRECTED ERRORS CONTAINED IN THESE DRAWINGS ARE MY RESPONSIBILITY.
4. ANY CHANGES TO THESE DRAWINGS WHICH CREATE UNCORRECTED ERRORS ARE MY RESPONSIBILITY.
5. FCBP HAS CONTRACTED TO SUPPLY THE MATERIAL QUANTITIES PRINTED ON THESE DRAWINGS. ANY ADDITIONAL MATERIAL WILL BE BILLED SEPARATELY FROM THE ORIGINAL PURCHASE ORDER.

SIGNATURE DATE

THIS ORDER CANNOT BE RELEASED FOR PRODUCTION WITHOUT YOUR SIGNATURE!

REQ'D. :(2) 01 / P14 ECHO STONE PANEL
4'-0 5/8"H x 1 7/8"D x 3'-0"W

TOTAL: (2)

FIRST CLASS
ARCHITECTURAL PRODUCTS
1-888-514-8141

FIRST CLASS
Building Products, Inc.
3600 DALLAS HIGHWAY
SUITE 230-387
MARIETTA GA 30064
WWW.FIRSTCLASSBP.COM

THESE PLANS AND THE DESIGNS CONTAINED THEREIN ARE THE SOLE PROPERTY First Class Building Products (HEREINAFTER DESIGNATED FCBP). THESE PLANS MAY NOT BE REPRODUCED OR USED WITHOUT WRITTEN PERMISSION OF DEC. UNAUTHORIZED USE SHALL INVITE A CLAIM FOR COMPENSATION BY FCBP. ALL FABRICATORS, CONTRACTORS INDICATED AND OTHERS UTILIZING THESE PLANS IN CONNECTION WITH THIS PROJECT ARE RESPONSIBLE FOR THEIR OWN MEASUREMENTS AND DIMENSIONS ON THE JOB. PLUMBING AND ELECTRICAL INFORMATION AND OUTLETS ARE FOR THE SOLE PURPOSE OF INDICATING THE REQUIREMENTS OF THE FIXTURES AND EQUIPMENT. STRUCTURAL FCBP ASSUMES NO RESPONSIBILITY FOR WORK DONE BY CONTRACTORS. NOR FOR ANY CHANGES MADE NECESSARY BY LOCAL BUILDING CODES, ORDINANCES CONDITIONS, OR BY THE SUBSTITUTION OF MATERIALS WHICH MAY BE DEEMED EQUAL BY OTHERS. CONTRACTORS AND FABRICATORS, CONTRACTORS, AND ALL OTHER PERSONS UTILIZING THESE PLANS ARE ADVISED THAT THEY ARE RESPONSIBLE FOR EXAMINING AND BECOMING FAMILIAR WITH SAID GENERAL NOTES BEFORE COMMENCING ANY WORK DONE ON THIS PROJECT. ANY INCONSISTANCIES BETWEEN THESE PLANS, THE GENERAL NOTES, AND THE LOCAL BUILDING CODES, OR ORDINANCES, MUST IMMEDIATELY BE CALLED TO THE ATTENTION OF FCBP IN WRITING SO THAT ANY INCONSISTANCIES CAN BE RESOLVED. FCBP IS NOT RESPONSIBLE FOR ANY ARCHITECTURAL OR ENGINEERING DETAILS OR SPECIFICATIONS. THE USE BY ANY PERSON OR FIRM OF THESE PLANS OR ANY PART THEREOF SHALL NOT IN ANY WAY SUBJECT FCBP TO ANY COST OR DAMAGES FOR ANY ERROR OR OMISSION CONTAINED THEREIN.

No.	REVISION	DATE	BY
1	CLIENT UPDATE	3-10-11	DS

REVISIONS

RADFORD UNIVERSITY
RADFORD, VA
WHITING-TURNER CONTRACTING

SCALE	AS SHOWN
DRAWN BY	DS
DEC PROJ. MGR.	
APPROVED BY	
QUOTE NO.	13148-2
DATE	12-29-10

ECHO STONE PANEL

SHEET No. P14
JOB NO. 10-2861

(M-2) ECHO STONE PANEL AS SHOWN 1

FILE NAME:
MEX. DATES:
DATE PLOTTED:

WHITING TURNER CONTRACTING

I HAVE REVIEWED THESE DRAWINGS AND THEY ARE APPROVED FOR PRODUCTION. MY SIGNATURE BELOW CONFIRMS MY UNDERSTANDING AND ACCEPTANCE OF THE FOLLOWING CONDITIONS.

1. ANY CHANGES TO THESE DRAWINGS NOT INITIALED BY ME WILL BE IGNORED BY FCBP.
2. ANY CHANGES TO THESE DRAWINGS MAY RESULT IN A PRICE ADJUSTMENT.
3. ANY UNCORRECTED ERRORS CONTAINED IN THESE DRAWINGS ARE MY RESPONSIBILITY.
4. ANY CHANGES TO THESE DRAWINGS WHICH CREATE UNCORRECTED ERRORS ARE MY RESPONSIBILITY.
5. FCBP. HAS CONTRACTED TO SUPPLY THE MATERIAL QUANTITIES PRINTED ON THESE DRAWINGS. ANY ADDITIONAL MATERIAL WILL BE BILLED SEPARATELY FROM THE ORIGINAL PURCHASE ORDER.

SIGNATURE DATE

THIS ORDER CANNOT BE RELEASED FOR PRODUCTION WITHOUT YOUR SIGNATURE!

C

B

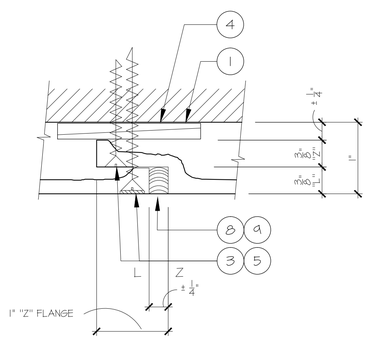

A

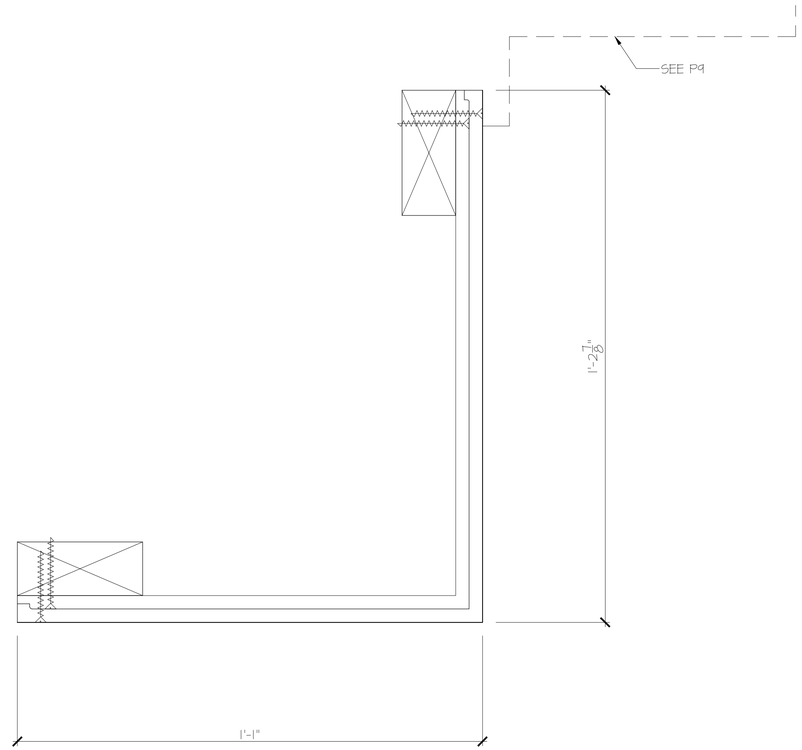

1 DETAIL SECTION
SCALE : 6" = 1'-0"

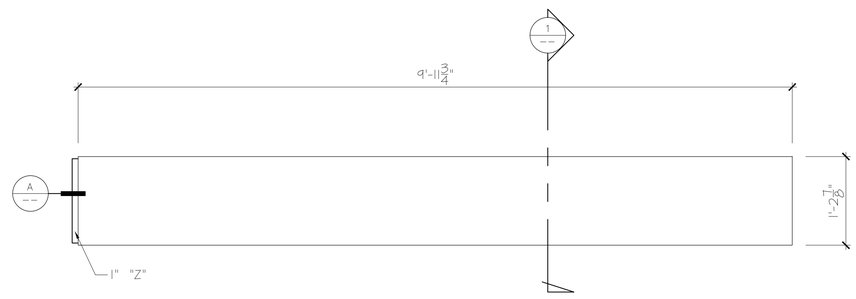

2 ELEVATION
SCALE : 1" = 1'-0"

REQ'D. :(3) 01 / P15 ECHO STONE TRIM
1'-2 7/8"H x 1'-1"D
9'-11 3/4" STRAIGHT LENGTH
Z/L

TOTAL: (3)

DETAIL SECTION | FULL | A | (N) | ECHO STONE TRIM | AS SHOWN | 1

FILE NAME:
MEX. DATES:
DATE PLOTTED:

FIRST CLASS ARCHITECTURAL PRODUCTS
1-888-514-8141

FIRST CLASS
Building Products, Inc.
3600 DALLAS HIGHWAY
SUITE 230-387
MARIETTA GA 30064
WWW.FIRSTCLASSBP.COM

THESE PLANS AND THE DESIGNS CONTAINED THEREIN ARE THE SOLE PROPERTY First Class Building Products (HEREINAFTER DESIGNATED FCBP). THESE PLANS MAY NOT BE REPRODUCED OR USED WITHOUT WRITTEN PERMISSION OF FCBP. UNAUTHORIZED USE SHALL INVITE A CLAIM FOR COMPENSATION BY FCBP. ALL FABRICATORS, CONTRACTORS INDICATED AND OTHERS UTILIZING THESE PLANS IN CONNECTION WITH THIS PROJECT ARE RESPONSIBLE FOR THEIR OWN MEASUREMENTS AND DIMENSIONS ON THE JOB. PLUMBING AND ELECTRICAL INFORMATION AND OUTLETS ARE FOR THE SOLE PURPOSE OF INDICATING THE REQUIREMENTS OF THE FIXTURES AND EQUIPMENT., STRUCTURAL FCBP ASSUMES NO RESPONSIBILITY FOR WORK DONE BY CONTRACTORS, NOR FOR ANY CHANGES MADE NECESSARY BY LOCAL BUILDING CODES, ORDINANCES CONDITIONS, OR BY THE SUBSTITUTION OR CHANGES IN EQUIPMENT SHOWN ON THESE PLANS. REFERENCE IS MADE TO THE GENERAL NOTES WHICH ARE PART OF THESE PLANS, AND FABRICATORS, CONTRACTORS, AND ALL OTHER PERSONS UTILIZING THESE PLANS ARE ADVISED THAT THEY ARE RESPONSIBLE FOR EXAMINING AND BECOMING FAMILIAR WITH SAID GENERAL NOTES BEFORE COMMENCING ANY WORK DONE ON THIS PROJECT. ANY INCONSISTANCIES BETWEEN THESE PLANS, THE GENERAL NOTES, AND THE LOCAL BUILDING CODES OR ORDINANCES MUST BE REPORTED TO FCBP BEFORE ANY WORK MAY BE CONTINUED. ANY INCONSISTANCIES THAT ARE NOT REPORTED TO FCBP WILL RESULT IN FCBP NOT BEING RESPONSIBLE FOR ANY AREA, SECTIONAL, OR OVERALL DETAILS THAT MAY BE AFFECTED. FCBP WILL NOT BE LIABLE TO THE OPERATORS OF THE USE BY ANY PERSON OR FIRM OF THESE PLANS OR ANY PART THEREOF SHALL NOT IN ANY WAY SUBJECT FCBP TO ANY COST OR DAMAGES FOR ANY ERROR OR OMISSION CONTAINED THEREIN.
THEREUP SHALL NOT IN ANY WAY SUBJECT FCBP TO ANY COST OR DAMAGES FOR ANY ERROR OR OMISSION CONTAINED THEREIN.

No.	REVISION	DATE	BY
1	CLIENT UPDATE	3-10-11	DS

REVISIONS

RADFORD UNIVERSITY
RADFORD, VA
WHITING-TURNER CONTRACTING

SCALE	AS SHOWN
DRAWN BY	DS
DEC PROJ. MGR.	
APPROVED BY	
QUOTE NO.	13148-2
DATE	12-29-10

ECHO STONE TRIM

SHEET No. P15

JOB NO. 10-2861

WHITING TURNER CONTRACTING

I HAVE REVIEWED THESE DRAWINGS AND THEY ARE APPROVED FOR PRODUCTION. MY SIGNATURE BELOW CONFIRMS MY UNDERSTANDING AND ACCEPTANCE OF THE FOLLOWING CONDITIONS.

1. ANY CHANGES TO THESE DRAWINGS NOT INITIALED BY ME WILL BE IGNORED BY FCBP.
2. ANY CHANGES TO THESE DRAWINGS MAY RESULT IN A PRICE ADJUSTMENT.
3. ANY UNCORRECTED ERRORS CONTAINED IN THESE DRAWINGS ARE MY RESPONSIBILITY.
4. ANY CHANGES TO THESE DRAWINGS WHICH CREATE UNCORRECTED ERRORS ARE MY RESPONSIBILITY.
5. FCBP HAS CONTRACTED TO SUPPLY THE MATERIAL QUANTITIES PRINTED ON THESE DRAWINGS. ANY ADDITIONAL MATERIAL WILL BE BILLED SEPARATELY FROM THE ORIGINAL PURCHASE ORDER.

SIGNATURE DATE

THIS ORDER CANNOT BE RELEASED FOR PRODUCTION WITHOUT YOUR SIGNATURE!

C

B

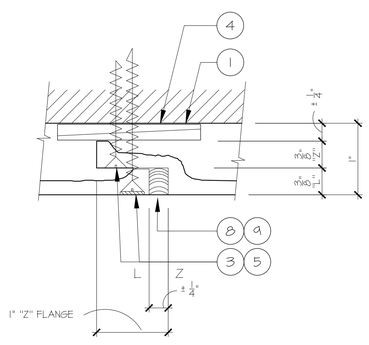

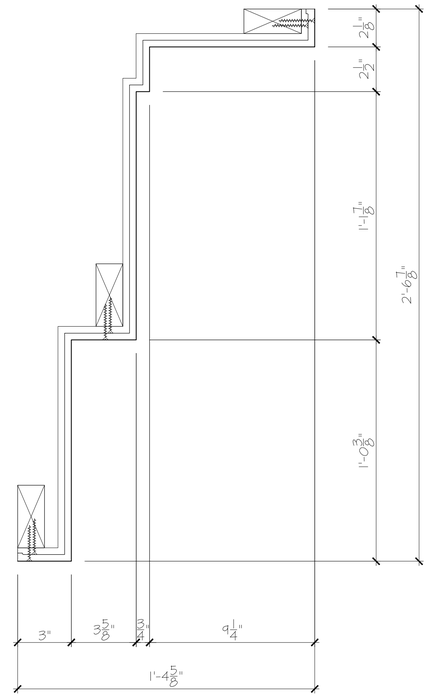

1 DETAIL SECTION
SCALE : 3" = 1'-0"

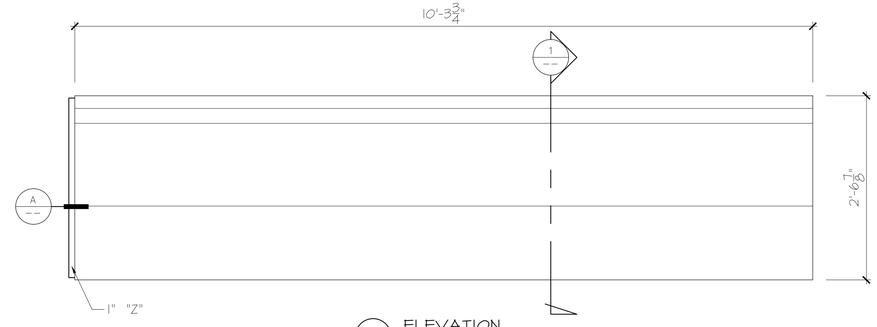

2 ELEVATION
SCALE : 1" = 1'-0"

REQ'D. :(3) 01 / P16 ECHO STONE TRIM
2'-6 7/8"H x 1'-4 5/8"D Z/L
10'-3 3/4" STRAIGHT LENGTH

TOTAL: (3)

FIRST CLASS ARCHITECTURAL PRODUCTS
1-888-514-8141

FIRST CLASS
Building Products, Inc.
3600 DALLAS HIGHWAY
SUITE 230-387
MARIETTA GA 30064
WWW.FIRSTCLASSBP.COM

THESE PLANS AND THE DESIGNS CONTAINED THEREIN ARE THE SOLE PROPERTY First Class Building Products (HEREINAFTER DESIGNATED FCBP). THESE PLANS MAY NOT BE REPRODUCED OR USED WITHOUT WRITTEN PERMISSION OF DEC. UNAUTHORIZED USE SHALL INVITE A CLAIM FOR COMPENSATION BY FCBP. ALL FABRICATORS, CONTRACTORS INDICATED AND OTHERS UTILIZING THESE PLANS IN CONNECTION WITH THIS PROJECT ARE RESPONSIBLE FOR THEIR OWN MEASUREMENTS AND DIMENSIONS ON THE JOB. PLUMBING AND ELECTRICAL INFORMATION AND OUTLETS ARE FOR THE SOLE PURPOSE OF INDICATING THE REQUIREMENTS OF THE FIXTURES AND EQUIPMENT. STRUCTURAL FCBP ASSUMES NO RESPONSIBILITY FOR WORK DONE BY CONTRACTORS, NOR FOR ANY CHANGES MADE NECESSARY BY LOCAL BUILDING CODES, ORDINANCES CONDITIONS, FOR PURPOSES OF ESTIMATING ONLY. ALL DIMENSIONS SHOWN ARE NOMINAL AND MUST BE FIELD VERIFIED. ALL FABRICATORS, CONTRACTORS, AND ALL OTHER PERSONS UTILIZING THESE PLANS ARE ADVISED THAT THEY ARE RESPONSIBLE FOR EXAMINING AND BECOMING FAMILIAR WITH SAID GENERAL NOTES BEFORE COMMENCING ANY WORK DONE ON THIS PROJECT. ANY INCONSISTANCIES BETWEEN THESE PLANS, THE GENERAL NOTES, AND THE LOCAL BUILDING CODES, OR ORDINANCES, MUST IMMEDIATELY BE CALLED TO THE ATTENTION OF FCBP IN WRITING SO THAT ANY INCONSISTANCIES CAN BE RESOLVED. FCBP IS NOT RESPONSIBLE FOR ANY ARCHITECTURAL OR ENGINEERING DETAILS OR SPECIFICATIONS. THE USE BY ANY PERSON OR FIRM OF THESE PLANS OR ANY PART THEREOF SHALL NOT IN ANY WAY SUBJECT FCBP TO ANY COST OR DAMAGES FOR ANY ERROR OR OMISSION CONTAINED THEREIN.

No.	REVISION	DATE	BY
1	CLIENT UPDATE	3-10-11	DS

REVISIONS

RADFORD UNIVERSITY
RADFORD, VA
WHITING-TURNER CONTRACTING

SCALE	AS SHOWN
DRAWN BY	DS
DEC PROJ. MGR.	
APPROVED BY	
QUOTE NO.	13148-2
DATE	12-29-10

ECHO STONE TRIM

SHEET No. P16
JOB NO. 10-2861

DETAIL SECTION | FULL | A | (0) | ECHO STONE TRIM | AS SHOWN | 1

FILE NAME:
MEX. DATES:
DATE PLOTTED: